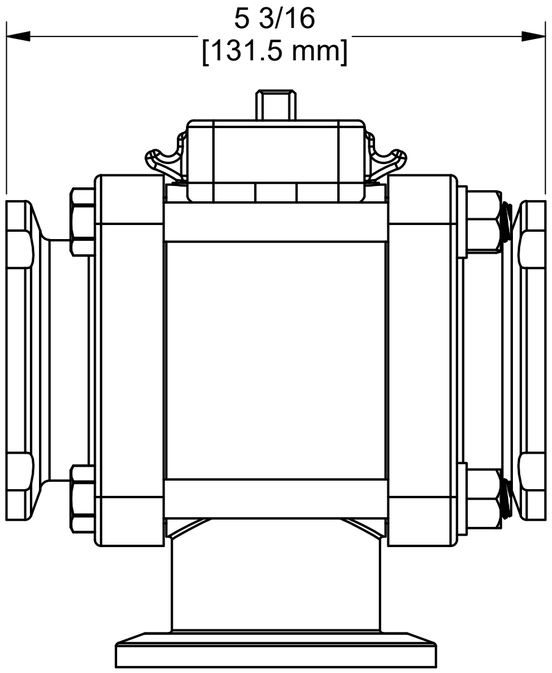

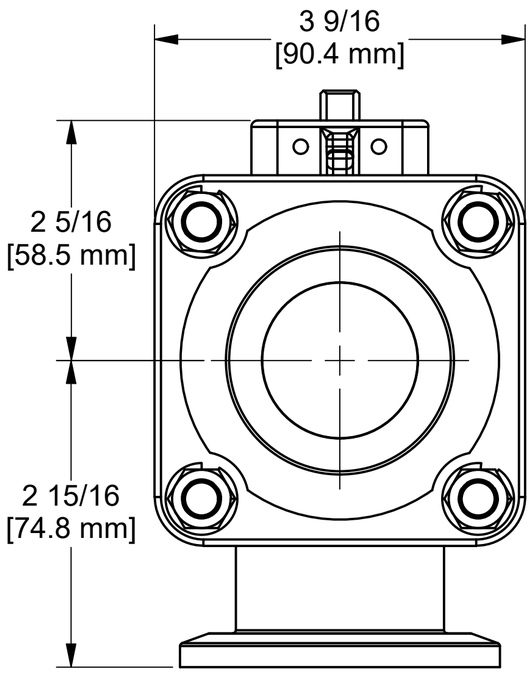

Parts List			
ITEM	QTY	PART NUMBER	DESCRIPTION
1	1	AQ206V	#206 QUAD RING, FKM
2	1	EVP20151A	EVX VALVE SS STEM 1-2"SP BOLTED
3	1	MEVX20354AB	2" BL VE BODY
4	4	V20017	3/8-16 X 4" HHCS
5	4	V20018	3/8" LOCKWASHER
6	4	V20019	3/8-16 HEX NUT
7	2	VE20258A	2" VE Seat TFM
8	2	VE20264	AS568A -150 O-RING, FKM, BROWN
9	2	VE20294A	2" MANIFOLD EV ENDPLATE, MACHINED
10	1	VE20355BL	2" SP SS BL 2-HOLE EVX BALL



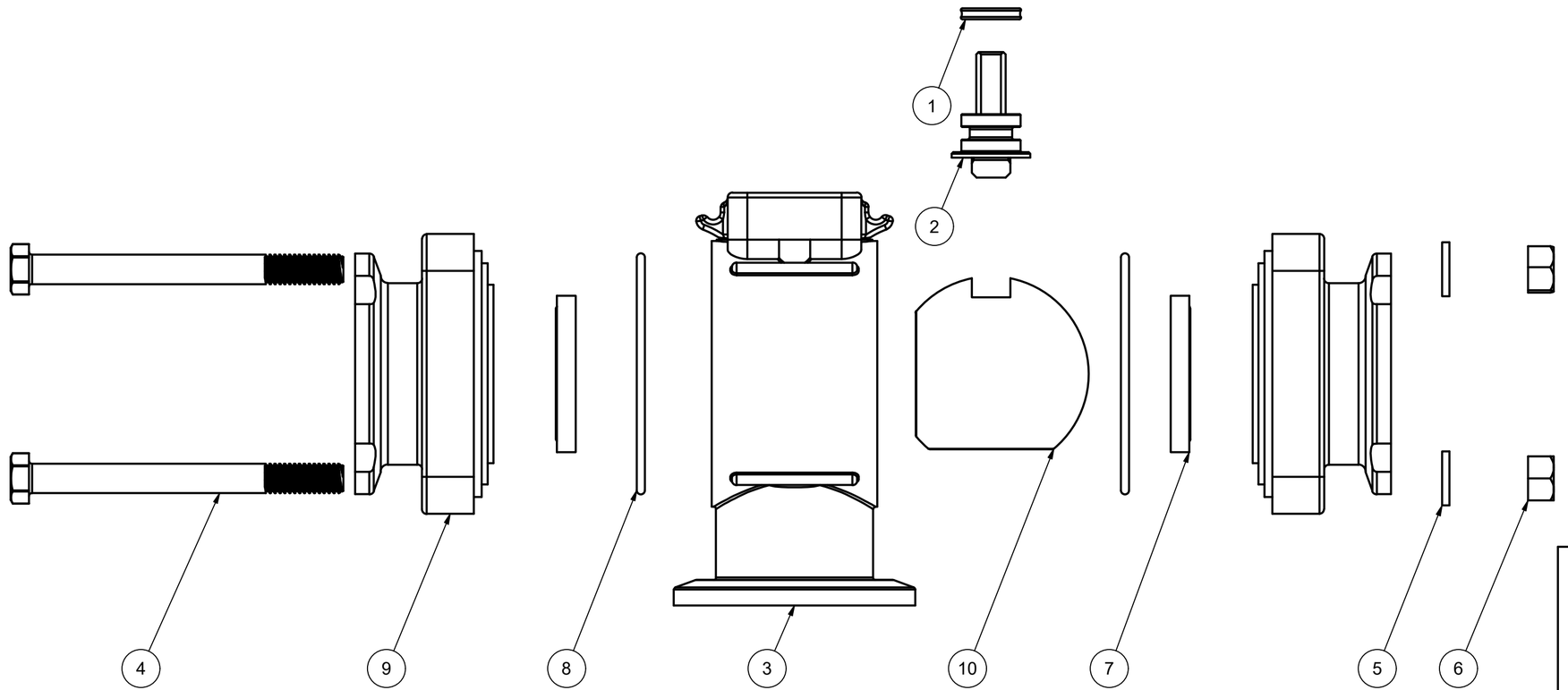

THIS DRAWING AND ALL INFORMATION CONTAINED THEREON ARE THE EXCLUSIVE PROPERTY OF BANJO CORPORATION.

UNLESS SPECIFICALLY NOTED, THIS DRAWING AND ITEMS SHOWN ON THIS DRAWING ARE SUBJECT TO CHANGE AT ANY TIME.

BANJO CORPORATION

BANJO CORPORATION
150 BANJO DRIVE, CRAWFORDSVILLE, IN 47933
WEB SITE: WWW.BANJOCORP.COM
E-MAIL: BANJOSALES@IDEXCORP.COM

DESCRIPTION

2" MEVX SP BL 2-HOLE VALVE-ONLY

PART NUMBER

MEVX201BLX