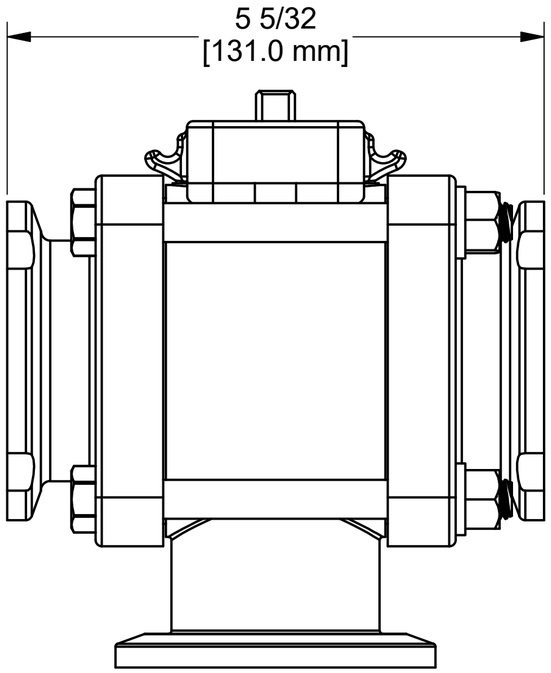

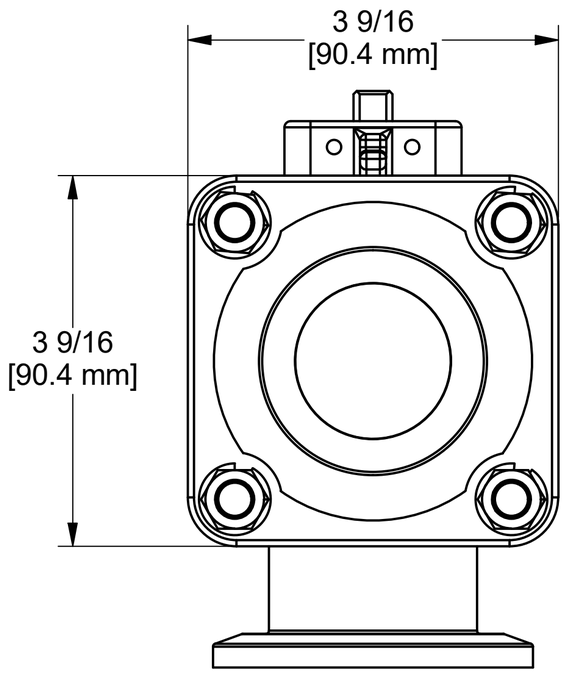

Parts List			
ITEM	QTY	PART NUMBER	DESCRIPTION
1	1	AQ206V	#206 QUAD RING, FKM
2	1	EVP20151A	EVX VALVE SS STEM 1-2"SP BOLTED
3	1	MEVX20354AB	2" BL VE BODY
4	4	V20017	3/8-16 X 4" HHCS
5	4	V20018	3/8" LOCKWASHER
6	4	V20019	3/8" HEX NUT
7	2	VE20258A	2" VE Seat TFM
8	2	VE20264	2-150 O'RING, FKM
9	2	VE20294A	2" Manifold EV Endplate
10	1	VE20355	2" VE 3-Way SS Ball

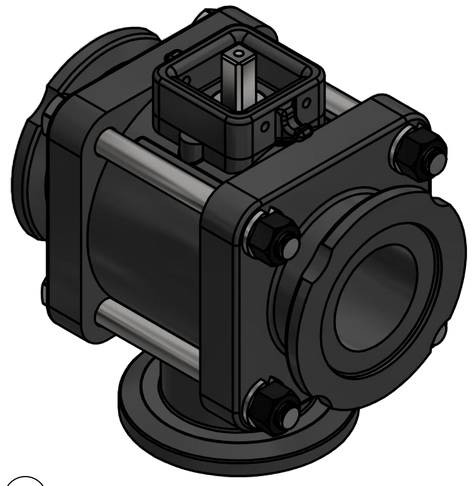

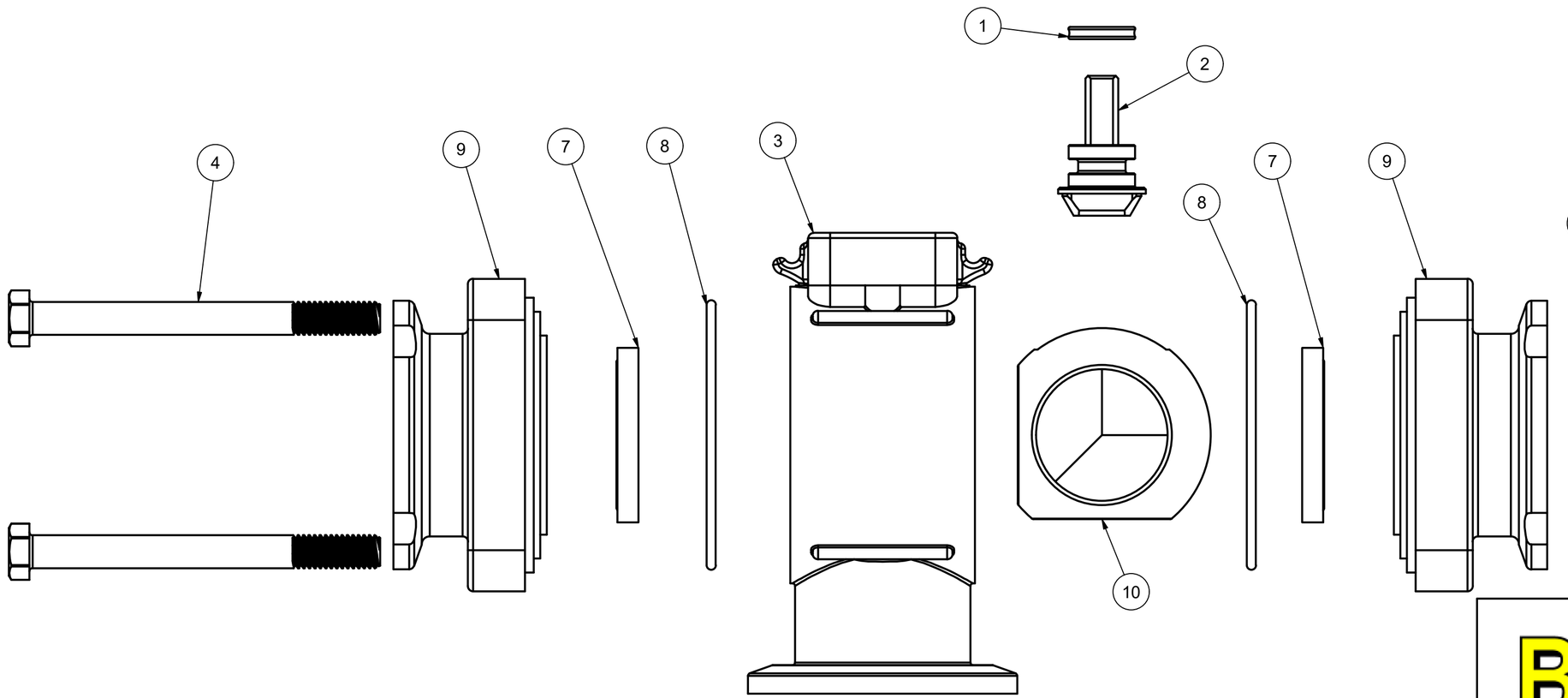

ASSEMBLY SPECS:
BODY BOLT TIGHTENING TORQUE: 75 IN-LB
MAX STEM TURNING TORQUE: 75 IN-LB

THIS DRAWING AND ALL INFORMATION CONTAINED THEREON ARE THE EXCLUSIVE PROPERTY OF BANJO CORPORATION.

UNLESS SPECIFICALLY NOTED, THIS DRAWING AND ITEMS SHOWN ON THIS DRAWING ARE SUBJECT TO CHANGE AT ANY TIME.

BANJO CORPORATION

BANJO CORPORATION
150 BANJO DRIVE, CRAWFORDSVILLE, IN 47933
WEB SITE: WWW.BANJOCORP.COM
E-MAIL: BANJOSALES@IDEXCORP.COM

DESCRIPTION
2" SP EVX BL MANIFOLD VALVE

PART NUMBER
MEVX200BLX