450 Gasoline Engine
(Vertical Shaft)

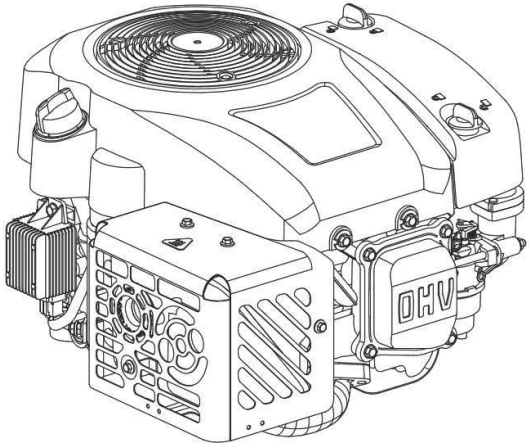

PREFACE

Thank you for choosing general gasoline engine of our company.

The manual gives information with respect to operation and maintenance of 340 vertical shaft series general gasoline engine, and be sure to read it carefully first before operation. Only operate as the manual tells, can insure user's safety and get the best results of the engine operation. If a problem should arise or if you have any questions about your gasoline engine, consult an authorized our company servicing dealer.

Vertical shaft gasoline engine series in this manual is mainly used in the lawn mover, mini-tiller and high pressure washer.

All information and diagrams of this manual are in accordance with the newest products at the publishing time. If revision and other change of the information descried in this manual are a little different from the actual status, our company will explain it. Our company reserves the right to make change at any time without notice and without incurring any obligation. No part of this publication may be reproduced without written permission.

This manual should be considered a permanent part of the engine and should remain with the engine if resold.

SAFETY MESSAGES

Your safety and the safety of others are very important. We have provided important safety messages in this manual and on the gasoline engine. Please read these messages carefully.

A safety message alerts you to potential hazards that could hurt you or others. Each safety message is preceded by a safety alert symbol ⚠ and one of three words: DANGER, WARNING, or CAUTION. These mean:

⚠WARNING **You CAN be KILLED or SERIOUSLY HURT if you don't follow instructions.**

⚠CAUTAION **You CAN be HURT if you don't follow instructions.**

⚠ DANGER **You WILL be KILLED or SERIOUSLY HURT if you don't follow instructions.**

NOTE **Your engine or other property could be damaged if you don't follow instructions.**

CONTENTS

I. SAFETY PRECAUTIONS 4
II . PARTS DESCRIPTION 6
1)FEATURE 6
2)MODEL & SERIES NO 7
I II. PRE-OPERATE INSPECTION 8
1) ENGINE OIL 8
2) AIR CLEANER 11
3) BATTERY CONNECTION 12
IV. STARTING THE ENGINE 13
V. RUNNING THE ENGINE 14
VI. STOPPING THE ENGINE 15
VII . EXHAUST CONTROL SYSTEM SERVICE 16
1)MAINTENANCE 16
2)REPLACING PARTS 16
3)TAMPERING AND ALTERING 16
4)PROBLEMS AFFECTING EXHAUST EMISSIONS 17
VIII. MAINTENANCE 18
1)MAINTENANCE SCHEDULE 18
2)MAINTENANCE METHOD 19
IX. TRANSPORT AND STORAGE 22
X. TROUBLESHOOTING 23
XI. SPECIFICATIONS 27
XII. ELECTRIC DIAGRAM 28
XIII. EASY WORN PARTS AND ACCESSORIES LIST 29

I. SAFETY PRECAUTIONS

WARNING **Indicate a possibility of invalid warranty and personal or equipment damage if instructions are not followed.**

Please pay special attention to the following:

1. Strictly set the engine according to the regulated power on the owner's manual. Do not overload, overspeed the engine or run it with low load and at low speed in a long time.
2. Use specified grade of gasoline. The fuel should be fully deposited and filtrated before use. Keep clean the fuel filler, change the oil periodically.
3. Periodically check the installation, connection and the degree of tightness of the fixed bolt. Tighten it if necessary.
4. Periodically clean the element of the air cleaner, change it when necessary.
5. The engine is air-cooled, so clean the radiator, fan cover and fan in time in order to make the engine cool normally.
6. The operator should be familiar with the working principle and structure of the gasoline engine, knowing how to make an emergent stop and the operation of all controlling parts. Any one without training is forbidden to operate the engine. Keep periodical maintenance. Solve problems in time. Do not run the engine in spite of malfunction.
7. Running the engine in a well -ventilated place, keep it at least one meter away from building walls or other equipments, keep away from

inflammables such as gasoline, matches and so on to avoid possibility of fire.

8. Refuel in a well-ventilated area with the engine stopped, and in places refueling or storing gasoline, no smoking and any flames or sparks.
9. Refuel the fuel tank not too full so as to avoid fuel's spilling out. If there is spilled fuel around, be sure to clean it thoroughly before starting.
10. Do not run the engine in airtight or ill-ventilated places.
11. The exhaust muffler is very hot during running the engine even after the engine stops. Never touch it, or you may get burns. Transport or store the engine with it cooling down entirely.
12. Safe warning label:

Please carefully read warning label before operating. Our company will not assume any responsibility for person hurt, or equipment damaged caused by disregarding this warning label.

II. PARTS DESCRIPTION

1. FEATURE

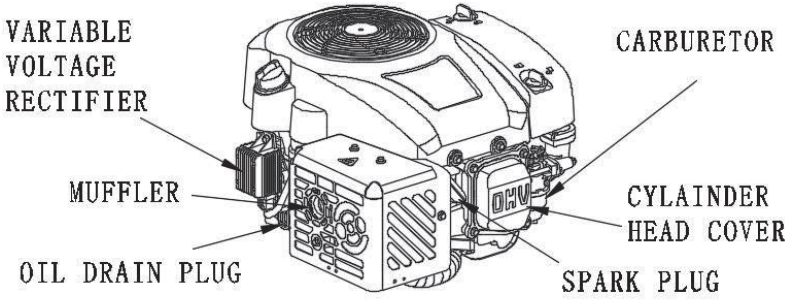

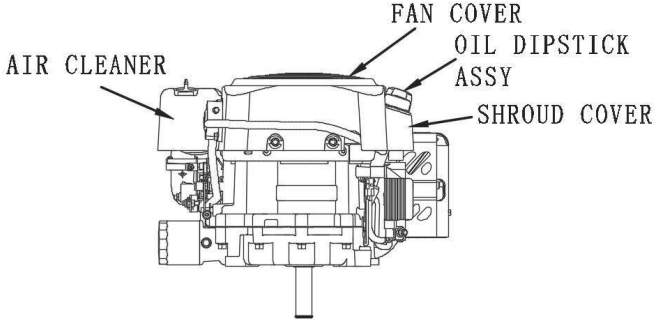

2. MODEL & SERIES NO.

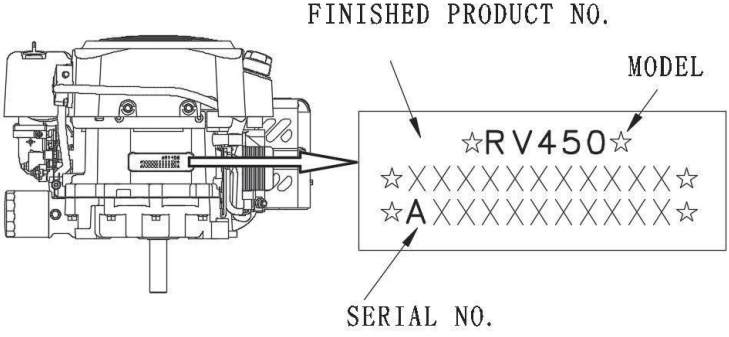

III. PRE-OPERATE INSPECTION

1. ENGINE OIL

- Engine oil is a key factor in deciding the engine's performance. Do not apply engine oil with additives or 2-stroke gasoline engine oil, because they haven't enough lubrication, and may shorten the engines service life.
- **Check the engine with it stopped on a level ground.**

NOTE Use 4-stroke engine oil for API service classification SE class or equivalent, and always check API service label on the oil container to be sure it includes the letters SE or equivalent.

ENGINE OIL CAPACITY: 340 1.1L
ENGINE OIL RECOMMENDED: SAE10W-30

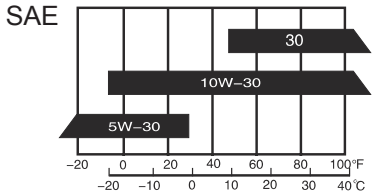

Check method:

1) Remove the dipstick and clean it.
2) Reinsert the dipstick into the oil filling hole without screwing it, and check oil level.
3) If the oil level is too low, add the recommended engine oil up to the oil upper level.

4) Reinstall the dipstick.

AMPLIFIED FIGURE

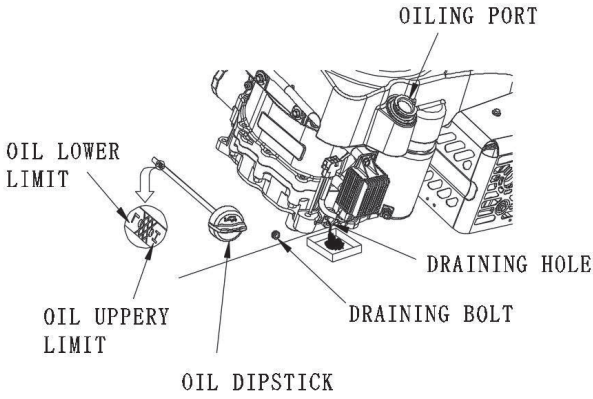

Engine oil change:

CAUTAION Used engine oil may cause skin cancer if repeatedly left in contact with the skin for prolonged periods. It is still advisable to thoroughly wash your hands with soap and water as soon as possible after handling used oil. Please dispose of used engine oil in a manner that is compatible with the environment.

1)Screw the draining bolt out.

2)Tilt the gasoline engine and let the oil overflowing out from the draining hole.

2. AIR CLEANER

⚠CAUTAION Never run the engine without an air cleaner, or severe wear of the engine may be resulted in.

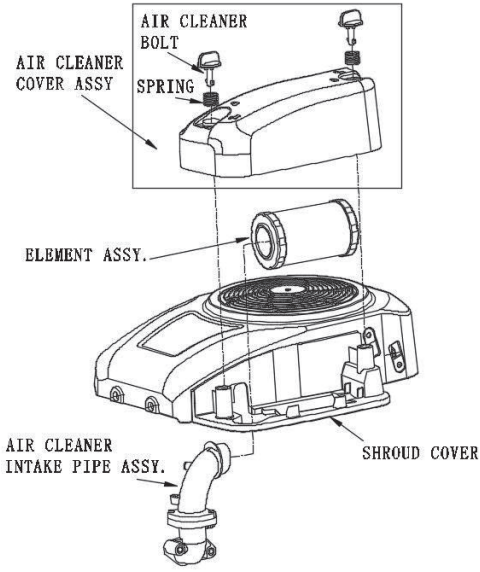

① Remove the air cleaner cover assy.

② Remove foam element or paper element, paying attention to prevent dust and foreign matter entering into air cleaner.

③ Check, clean or replace damaged air cleaner parts

④ Reinstall the air cleaner parts.

3. BATTERY CONNECTION

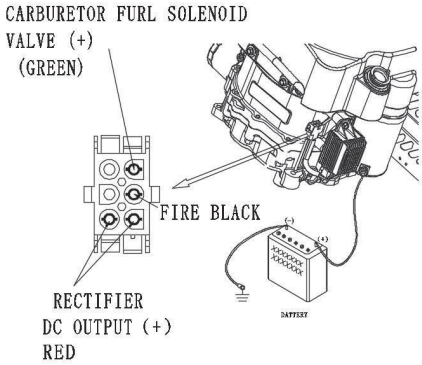

Use 12V and more than 45A·H battery, connect its positive lead to start relay terminal while connect its negative lead to engine mounting screw, base screw or other grounding point with the engine.(See Fig. 2)

Check the battery's connecting point; make sure that it is tight and not rusted. If rusted, clean and connect. Apply the grease on the end and connector lug.

⚠WARNING

1. **The battery may give off explosive gas, keep sparks, flames and cigarettes away. Charge or use it indoors with good ventilation.**
2. **The battery contains sulphuric acid (electrolyte). Contact with skin or eyes may cause severe burns.**

   If electrolyte gets in your skin, flush with water; if gets in your eyes, flush with water for at least 15 minutes and call a physician at once.

3. **Electrolyte is poisonous. If swallowed, drink large quantities of water or milk, and follow with milk of magnesia or vegetable oil and call a physician.**
4. **Keep out of reach of children.**

⚠CAUTAION

1. **Do not add tap water to the battery instead of distilled water, otherwise the battery service life will be shortened.**
2. **Do not add distilled water over electrolyte upper level mark, if not, electrolyte will spill out to corrupt the engine part. If so, be sure to wash them sway with water.**
3. **Make sure not to connect the battery leads in reverse order, or short-circuit or breaker's trip may be resulted in.**

IV. STARTING THE ENGINE

1) Before starting the engine, check each pre-operation check steps above mentioned, don't start the engine until all requirements above mentioned are met with.
2) Check the choke for CLOSE position.
3) Switch on the power supply and start the engine.

V. RUNNING THE ENGINE

After starting, move the choke lever toward fuel tank direction to make the choke at “OPEN” position

NOTICE

The engine speeds is adjusted well in the factory, so the engine can run at specified speed after starting. Don’t adjust the speeds by yourself with any purpose or it will hurt the person and damage the engine. If needing to adjust the speeds, please contact our company authorized dealer.

Otherwise user have a special tool and repaired ability.

VI. STOPPING THE ENGINE

After removing engine load, can directly turn the engine stop switch to "O" position or "STOP" position for stopping engine.

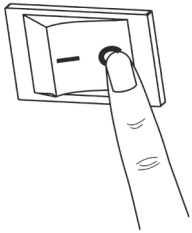

NOTICE

Don't stop the engine when the engine is running with maximum load at high speed to avoid the engine damaged.

VII. EXHAUST CONTROL SYSTEM SERVICE

With the engine running, carbon monoxide, oxide of nitrogen and hydrocarbon will produce, and in certain conditions, oxide of nitrogen and hydrocarbon will react chemically each other to make smoke while carbon monoxide is toxic, so exhaust control of them is very important.
The company decreases the exhaust emissions by introducing poor-fuel carburetors and other devices into the engine to solve the problem.
To keep the exhaust of your engine with in the standard exhaust emission, pay attention to the following:

1. Maintenance

Maintain the engine periodically in accordance with the maintenance schedule in the manual. The maintenance schedule is made out on the base of normal use in normal conditions, if using under heavy load, dusty or wet circumstances or in high temperature, service of the engine should be done more often.

2. Replacing Parts

To ensure the best quality and reliability, use only new genuine our company parts or their equivalents for repair and replacement.

3. Tampering and Altering

Tampering with or altering the emission control system may increase emissions beyond the legal limit. Among those acts that constitute tampering are:

1) Removal or alteration of any part of the intake, fuel, or exhaust systems.
2) Altering or defeating the governor linkage or speed-adjusting mechanism to cause the engine to operate outside its design parameters.

4. Problems Affecting Exhaust Emissions

1) Difficult starting or difficult stopping.
2) Engine speed is unstable.
3) Muffler exhausts black smoke, blue smoke or fuel and oil consume abnormal.
4) The engine backfire, abnormally stop or fire gun..

VIII. MAINTENANCE

1. MAINTENANCE SCHEDULE

In order to keep the engine well, must periodically service and adjust the engine. Service shall be as following schedule.

Item \ Frequency		Each time	First month or 20 hrs	Each season or 50 hrs	Every 6 month or 100 hrs	Each year or 300 hrs
Engine oil	Oil level check	√				
	Replace		√		√	
Air cleaner	Check	√				
	Clean–replace			√		
Spark plug	Clean, adjust				√	
	Replace				√	
Oil strainer	Clean				√	
Valve clearance	Check-adjust					√*
Cylinder head	Clean					√*

* This items should be serviced by company authorized dealer, unless you have the proper tools and mechanically proficient.

⚠CAUTAION

• Service more frequently when used in dusty areas.

2.MAINTENANCE METHOD

1. Replacement of engine oil

Drain the engine oil rapidly and completely out when the engine is hot.

1) Remove the oil dipstick, drain plug and washer and drain engine oil thoroughly. Reinstall the drain plug and screw in it securely.
2) Fill the recommended engine oil and check oil level with oil dipstick.
3) Reinstall the oil dipstick and tighten it securely.

NOTE Please dispose of used engine oil and the oil containers in a manner that is compatible with the environment. We suggest you take used oil in a sealed container to your local recycling center or service station for reclamation. Do not throw it in the trash or pour it on the ground or down a drain.

2. Maintenance of air cleaner

A dirty or damaged air cleaner will allow dust entering into the engine, causing rapid engine wear. So, service the air cleaner in time.

- Remove the bolt and air cleaner cover. Be careful to prevent dirt and debris from falling into the air cleaner base opening,
- Remove the foam element or paper element.
- Check, clean or replace the damaged air cleaner parts.
- Reinstall the air cleaner parts, then bolt and screw down it.

⚠WARNING Never clean the air cleaner element with gasoline or low flash-point detergents, or explosion may happen.

⚠CAUTAION Clean the foam filter with soapy water, blow the paper element with compressed air or lightly tap off dust and never dry to brush .

3.Maintenance of spark plug

In order to ensure the engine normal running, gap of the spark plug must be correct and no deposit around the spark plug.

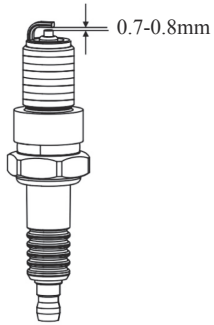

SPARK PLUG MODEL
NGK: BP5ES/BPR5ES
TORCH: F7RTC/F6RTC

⚠WARNING Don't touch the muffler to avoid burn in the engine running or just stopping a moment.

1) Remove the spark plug cap.
2) Clear away dirt around the spark plug base.
3) Dismantle the spark plug with a spark plug wrench.
4) Visually check the spark plug. Clean with a steel brush. If the insulator is damaged, replace the spark plug instead.
5) Measure the spark plug clearance with a feeler. The clearance should be 0.7~0.8mm. If adjustment is necessary, bend the side electrode carefully.
6) To avoid cross-threading, first, screw in spark plug by hand, then tighten with a spark plug wrench to compress the gasket.
7) If a new spark plug is used, more twist 1/2 turns after compressing the gasket.

8) If reinstalling the used spark plug, just more twist 1/8-1/4 turns.

⚠ CAUTAION

1) The spark plug must be tightened securely, or it may become very hot to damage the engine.
2) Only use recommended spark plug or the equivalent. Incorrect heat range of the spark plug may damage the engine.

IX. TRANSPORT AND STORAGE

⚠CAUTAION

Do not incline the engine so as to avoid fuel's spill in transporting. Spilled fuel or fuel vapor may ignite to cause fire. If suspension for a long time, storage should be as following:

1. The storage area is dry and free of dust.
2. Completely drain fuel out of the fuel tank and carburetor.

⚠WARNING

Fuel is extremely flammable and explosive under certain conditions. Keep smoke, fire and spark away from operating site.

- Turn the fuel cock to OFF (close) position and remove the oil drain plug of the carburetor.
- Turn the fuel cock to "ON" (open) position to drain the fuel of the fuel tank by carburetor to the container.
- Reinstall the oil drain plug.

3. Replace engine oil.
4. Remove the spark plug. Fill about a spoon of fresh engine oil onto the cylinder. Crank the engine up to distribute engine oil evenly. Reinstall the spark plug.
5. Lightly pull the recoil starter rope until the resistance is felt. Close the choke to protect the dust from entering in.
6. Cover the engine to protect dust entering.

X. TROUBLESHOOTING

1. START ENGINE DIFFICULTLY

TROUBLE			CAUSE		REMEDY
Normal cylinder compression	Normal spark plug spark	Something wrong with the fuel system.	Fuel supply is not smooth or no fuel supply.	There is no enough fuel in fuel tank and fuel cock is closed.	Fill fuel, open fuel cock.
				Air vent in the fuel filler cap is clogged	Dredge air vent.
				Fuel cock is clogged	Clean first and then dredge
				Improper or clogged main oil flow hole.	Readjust or clean, blow to get through.
				Needle valve is not closed properly or start hole is clogged.	Dismantle needle valve and repair, clean, blow to get through.
				Float is damaged or sticking.	Repair float
			Fuel supply is normal.	Fuel is too filthy or deteriorated	Replace
				There is water in fuel.	Replace
				Too much fuel in engine	Drain extra fuel, dry up spark plug electrodes.
				Wrong fuel brand	Select proper fuel brand corresponding with the requirements.
	Normal fuel supply system.	Normal high –tension line spark.	Spark plug is in bad conditions	Too much carbon deposit and dirt around electrodes.	Clear away.
				Electrodes are burn damaged seriously or insulators damaged.	Replace spark plug.
				Improper electrodes gap.	Adjust to proper value.
		High-tension line no spark Ignition system.	Normal spark plug	High –tension line is damaged.	Replace
				Ignition coil is damaged.	Replace
				Magneto loses magnetism.	Replace
				Piston ring is worn to or even over its wear limit	Replace
Abnormal cylinder compression.				Piston ring is broken.	Replace
				Piston ring is sticking.	Clear up carbon fouling.
				Spark plug is not installed tighten or without a gasket.	Tighten with a gasket in.
				Air leakage between cylinder block and cylinder head.	Check cylinder gasket, and the flatness of the surface by which cylinder block contacting with cylinder head
				Air leakage in the valves	Tighten cylinder head bolts in stipulated order to stipulated torque.
					Check valve. Clearance and tightness, repair if necessary.

If still can't starting, have the engine to our authorized dealer for repairing.

⚠WARNING

- **When testing the spark plug, never hold the high- voltage wire of the spark plug with wet hand.**
- **Make sure there is no spilled fuel outside the engine and that the spark plug isn't dipped with fuel.**
- **To prevent fire, keep sparks far away from the spark plug mounting hole.**

2. GASOLING ENGINE POWER OUTPUT INSUFFICIENCY:

TROUBLE		CAUSE	REMEDY
When increasing throttle, speed increase slow or even decrease and stop running	Fuel supply system	Air in fuel line or fuel line clogged	Exhaust air or dredge fuel line
		Main oil flow hole is not adjusted properly	Readjust
		In carburetor, needle valve hole and main oil flow hole clogged.	Clean and blow to get through
		Fuel cock is clogged up.	Clean, replace damaged part
		Too much carbon deposit in combusting chamber.	Clear away
		Too much car bon fouling in muffler and exhaust pipe.	Clear away
		Air cleaner is clogged up.	Clean air cleaner filter element
		Intake pipe is leaking	Repair or replace
	Poor compression	Piston or cylinder or piston ring is worn	Replace the worn
		Air leakage from the surface by which cylinder block contacting with cylinder head.	Replace cylinder gasket
		Too big or too small valve clearance.	Readjust
		Valve tightness is poor.	Repair

3. GASOLINE ENGINE CANNOT RUNNING SMOOTHLY

TROUBLE	CAUSE	REMEDY
Knocking sound	Piston, cylinder or piston ring is worn excessively.	Replace the worn
	Piston pin and piston pin hole are worn excessively.	Replace piston or piston pin
	Tie rod small head is worn excessively.	Replace tie rod
	Roller bearing for crankshaft main shaft is worn.	Replace roller bearing
Abnormal combustion	Engine is too hot	Shoot trouble
	Too much carbon deposit in combustion chamber	Clear away
	Improper gasoline brand or low gasoline quality	Replace with qualified gasoline
Spark lacking	There is water in float chamber	Clean
	improper spark plug electrodes clearance	Adjust
	Incorrect ignition time	Readjust
	Something wrong with induced coil, and so on	Check and replace damaged parts

4. STOP SUDDENLY WHEN RUNNING

TROUBLE	CAUSE		REMEDY
Stop suddenly when running.	Fuel supply system	Fuel is finished	Refill fuel
		Carburetor is clogged	Check fuel line and dredge
		Float is leaking	Repair
		Needle valve is sticked	Dismantle float chamber and eliminate it
	Ignition system	Spark plug is punctured, or short-circuited by carbon deposit	Replace spark plug
		Side electrode of spark plug is dropped out	Replace spark plug
		High-tension wire is dropped out	Weld on
		Ignition coil is punctured or short-circuited	Replace ignition coil
		Parking wire is located on engine body	Find out meeting and insulate
	The other	Cylinder is seriously scored and valve dropped out	Repair or replace damaged parts

5. GASOLINE ENGINE IS OVERHEAT

TROUBLE	CAUSE	REMEDY
Gasoline engine is overheat	Oil insufficient or wrong oil ratio in the gasoline	Refill engine oil
	Exhaust pipe blocked up	Clean exhaust pipe
	Shroud leaking	Repair damaged part
	Cooling fins blocked by foreign matter	Clear cooling fins
	Cooling fan i loosen and misfunction	Reinstall well
	Connection rod deformation to make piston and cylinder bushing side wear	Replace connection rod
	Cylinder or piston or piston ring is worn to make hunting between cylinder and crankcase	Replace the worn parts
	Improper adjustment of engine governor to produce speed high.	Readjust engine governor
	Crankshaft main bearing burnt out	Replace main bearing

⚠CAUTAION The gasoline engine should be kept about 80 ~ 110 ℃ temperature around the outlet of the shroud. If the temperature is too high, it will indicate the gasoline engine overheating.

6. THERE EXISTS ABNORMAL NOISE WHEN ENGINE RUNNING

TROUBLE	CAUSE	REMEDY
Beating sound	Piston, piston ring or cylinder is worn	Replace the worn part
	Connection rod or piston pin and piston pin hole are worn	Replace the worn part
	Crankshaft main neck is worn	Replace bearing
	Piston ring is broken	Replace piston ring
Metal beating sound when abnormal combustion occurs	Carbon deposition too much	Remove the carbon deposition
	Improper fuel brand	Replace fuel
	Engine is overheat	Find a cause and eliminate it
The other	Improper valve clearance	Readjust valve clearance properly
	Fly wheel is not connected with crankshaft tightly	Connect tightly

XI. SPECIFICATIONS

1. MAIN SPECIFICATON

Model	450
L×W×H(not including crankshaft output terminal)	463×460×302 (WITH MUFFLER)
Dry Weight	32.5
Engine Type	Single cylinder horizontal,4-stroke,(OHV)
Displacement	449.4
Bore × Stroke	92×67.6
Theoretical Maximum Power	10.2kw/3600r/min
Recommended Using Power	8kw/3100r/min
Maximum Torque	30N•m/2500r/min
Fuel Consumption	390g/kw•h
Cooling System	Forced air
Ignition System	Transistorized Magneto Ignition(TCI)
PTO Shaft Rotation	vertical shaft output

DATA ADJUSTMENT:

Items	Technical data	Service
Spark plug clearance	0.7~0.8mm	To see P20
Valve clearance (cold engine)	intake:0.10~0.15mm exhaust:0.15~0.20mm	to see our company authorized dealer
Igniter clearance	0.4±0.1mm	

⚠CAUTAION Specification is subject to change without notice. For further information, please contact our company dealer.

2. TORQUE OF IMPORTANT BOLTS:

Items	Thread dia.	Torque value	
		N• m	Kg• m
Connection-rod bolt	M8	16	1.6
Cylinder head bolt	M8	45	4.5
Flywheel nut	M16×1.5	115	11.5
Crankcase cover bolt	M8	24	2.4
Valve clearance adjusting nut	M6	10	1.0
Valve rocker bolt	M8	24	2.4
Spark plug	M14×1.25	22	2.2

XII. ELECTRIC DIAGRAM

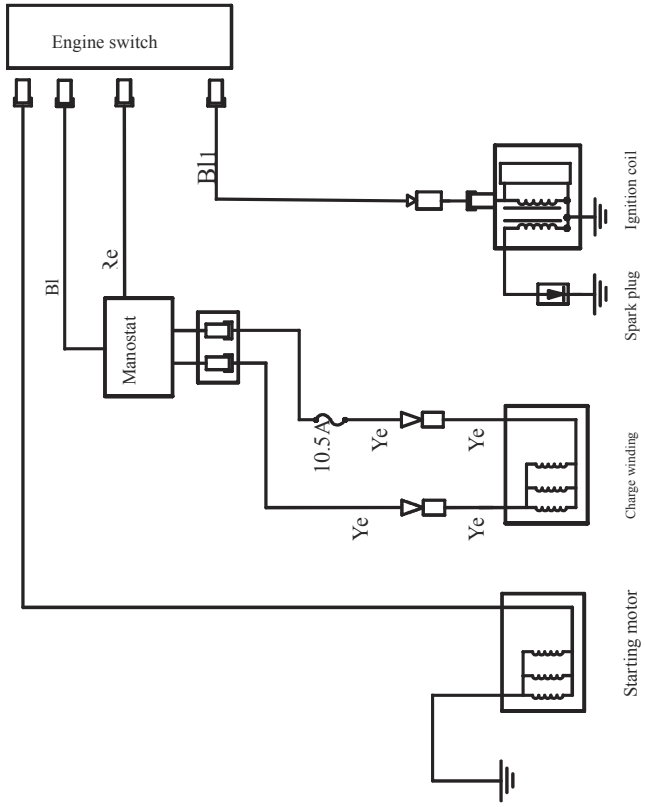

XIII. EASY WORN PARTS AND ACCESSORIES LIST

ASY WORN PARTS LIST:

CYLINDER HEAD COVER GASKET
CYLINDER HEAD GASKET
SPARK PLUG
OIL SEALING
BREATH GROOVE GASKET
CRANKCASE GASKET
OIL TUBE
CARBURETOR GASKET
INTAKE PORT GASKET
AIR CLEANER GASKET
EXHAUST VENT GASKET

ASY WORN PARTS LIST:

SLEEVE
FORCING BAR

93004-Z0N0110-0000