Totally Focused. Totally Independent.

IP CODE BULLETIN

28 July 2025

IP - International Protection

New C-TYPE machines IP components

The EN60034-5 applies to the classification of degrees of protection provided by enclosures for rotating electrical machines.

The object of EN60034-5 is to describe:

a) definitions for standard degrees of protection provided by enclosures applicable to rotating electrical machines as regards:
   1. protection of persons against contacts with or approach to live parts and against contact with moving parts (other than smooth rotating shafts and the like) inside the enclosure and protection of the machine against ingress of solid foreign objects;
   2. protection of machines against the hamful effects due to the ingress of water;

b) designations for these protective degrees.

c) Tests to be performed to check that machines meet the requirements of this standard.

The designation used for the degree of protection consists of the letters IP followed by two characteristic numerals signifying conformity

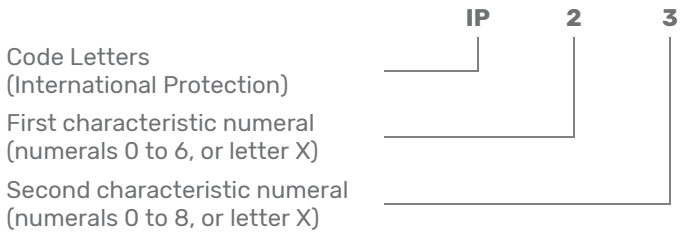

When it is required to indicate a degree of protection by only one characteristics numeral, the omitted numeral shall be replaced by the letter X, for example IPX5 or IP2X.

Additional information may be indicated by a supplementary letter following the second characteristics numeral. If more than one letter is used, the alphabetic sequence shall apply.

In special applications (such as machines with open circuit cooling for ship deck installation with air inlet and outlet openings closed during standstill) numerals may be followed by a letter indicating whether the protection against harmful effects due to ingress of water was verified or tested for the machine not

running (letter S) or the machine running (letter M). In this case the degree of protection in either state of the machine shall be indicated, for example IP55S/IP20M.

The absence of the letters S and M shall imply that the intended degree of protection will be provided under all normal conditions of use.

First characteristic numeral

The first characteristics numeral indicates the degree of protection provided by the enclosure to persons and to the parts of the machine inside the enclosure.

IP	Brief description	Definition
0X	Non-protected machine	No special protection
1X	Machine protected against solid objects greater than 50mm	Accidental or inadvertent contact with or approach to live and moving parts inside the enclosure by a large surface of the human body, such as a hand (but no protection against deliberate access) Ingress of solid objects exceeding 50mm in diameter
2X	Machine protected against solid objects greater than 12mm	Contact with or approach to live or moving parts inside the enclosure by fingers or similar objects not exceeding 80mm in length Ingress of solid objects exceeding 12mm in diameter
3X	Machine protected against solid objects greater than 2.5mm	Contact with or approach to live or moving parts inside the enclosure by tools or wires exceeding 2.5mm in diameter Ingress of solid objects exceeding 2.5mm in diameter
4X	Machine protected against solid objects greater than 1mm	Contact with or approach to live or moving parts inside the enclosure by wires or strips of thickness greater than 1mm Ingress of solid objects exceeding 1mm in diameter
5X	Dust-protected machine	Contact with or approach to live or moving parts inside the enclosure Ingress of dust is not totally prevented but dust does not enter in sufficient quantity to interfere with satisfactory operation of the machine

Totally Focused. Totally Independent.

Second characteristic numeral

The second characteristic numeral indicates the degree of protection provided by the enclosure with respect to harmful effects due to ingress of water.

IP	Brief description	Definition
X0	Non-protected machine	No special protection
X1	Machine protected against dripping water	Dripping water (vertically falling drops) shall have no harmful effects
X2	Machine protected against dripping water when tilted up to 15°	Vertically dripping water shall have no harmful effect when the machine is tilted at any angle up to 15° from its normal position
X3	Machine protected against spraying water	Water falling as a spray at an angle up to 60° from the vertical shall have no harmful effect
X4	Machine protected against splashing water	Water splashing against the machine from any direction shall have no harmful effect
X5	Machine protected against water jets	Water projected by a nozzle against the machine from any direction shall have no harmful effect
X6	Machine protected against heavy seas	Water from heavy seas or water projected powerful jets shall not enter the machine in harmful quantities
X7	Machine protected against the effects of immersion	Ingress water in the machine in harmful quantity shall not be possible when the machine is immersed in water under stated conditions of pressure and time
X8	Machine protected against continuous submersion	The machine is suitable for continuous submersion in water under conditions which shall be specified by the manufacturer Note: *Normally, this will mean that the machine is hermetically sealed. However with certain types of machines it can mean that water can enter but only in such a manner that it produces no harmful effect*

Totally Focused. Totally Independent.

Available IP Configurations on Mecc Alte C-TYPE machines

IP23

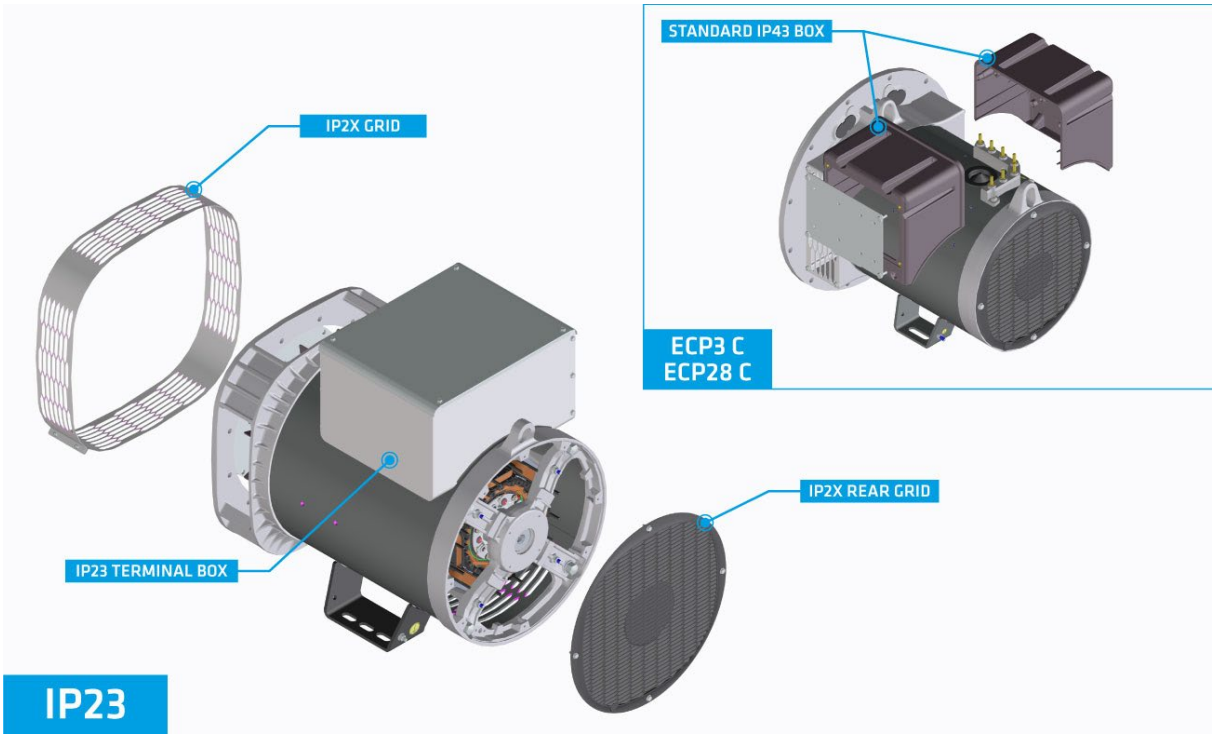

In this image you can see the standard configuration of our industrial generators.
In some series the standard terminal box is in plastic, having a degree of protection of IP43 (the degree of protection of the complete generator will remain IP23).

The degree of protection is IP23 and no derating factor has to be applied to the output power value.

IP	Derating
23	No derating

IP45 (Only terminal box)

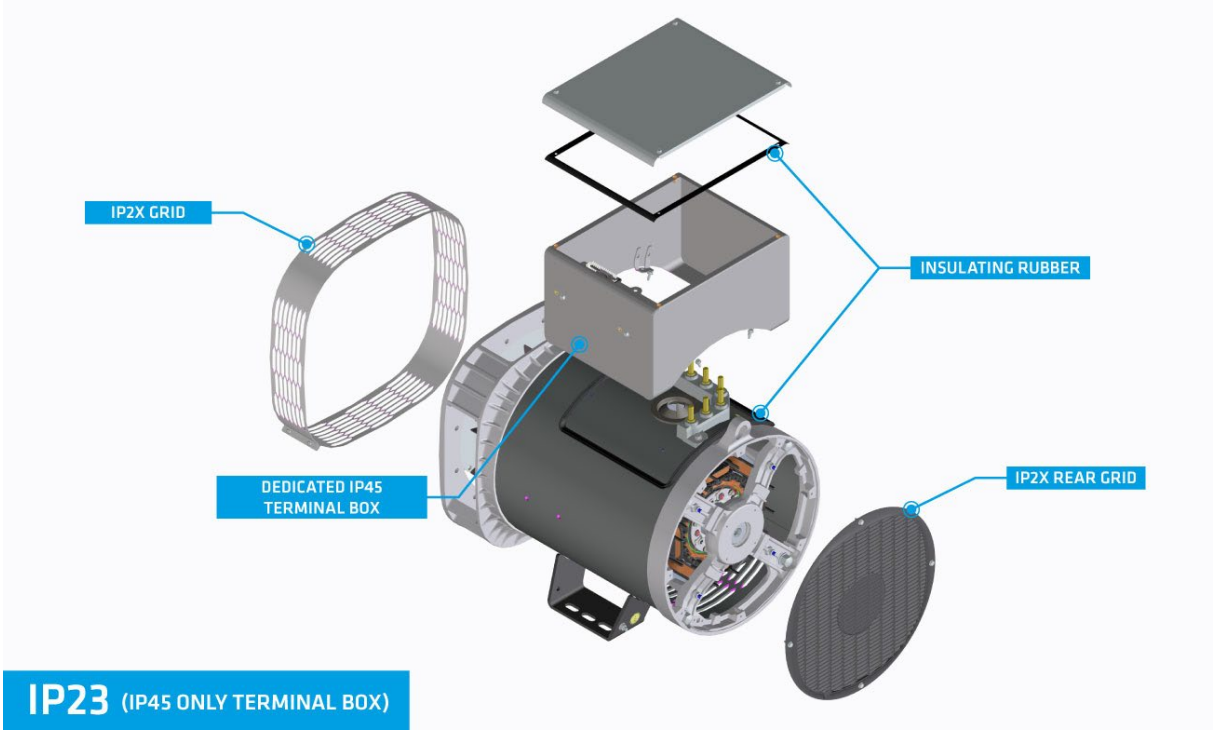

In this image you can see the available configuration we defined as IP23 with terminal box IP45

The degree of protection written in the nameplate is IP23 and, only the terminal box has a degree of protection of IP45.

No derating factor must be applied to the output power value.

IP	Derating
23	No derating

IP23 (Dust Proof)

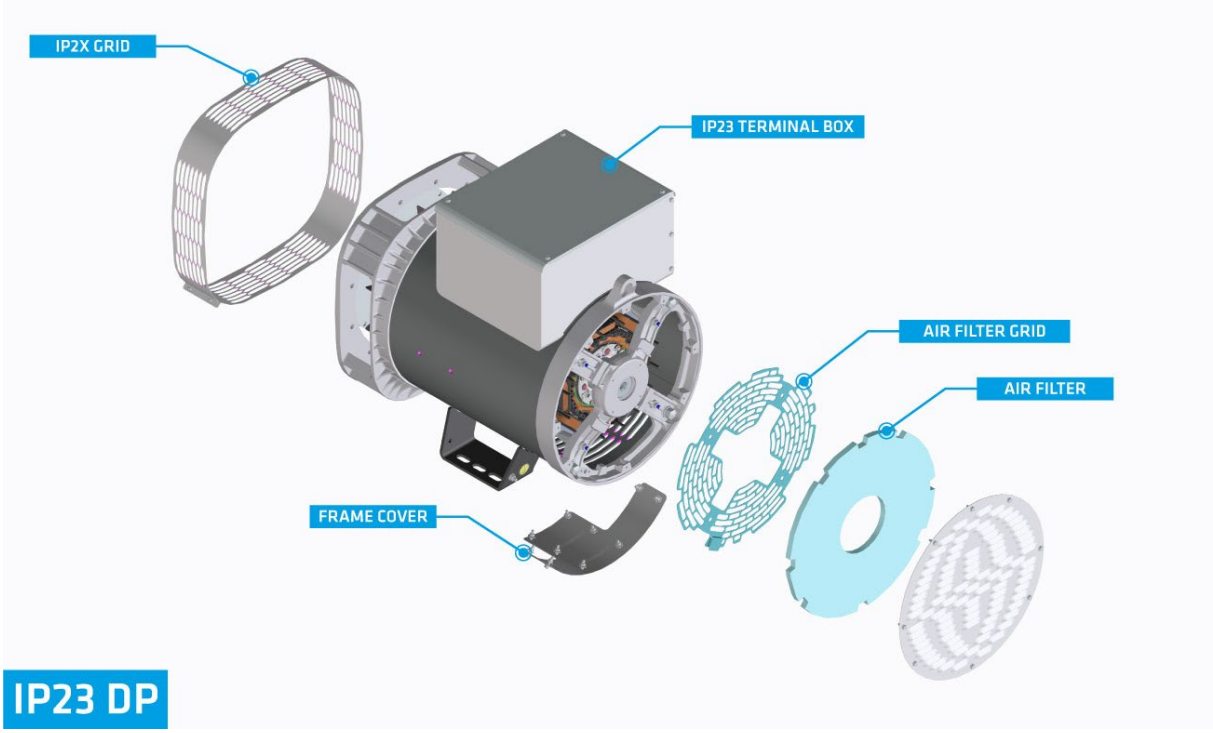

In this image you can see the configuration we define as dustproof.

The degree of protection shown on the plate is IP23, but if an air filter is mounted on the air inlet side and the lower openings of the frame are closed, a derating factor of 7% on the output power value must be applied.

IP	Derating
23	7%

IP43

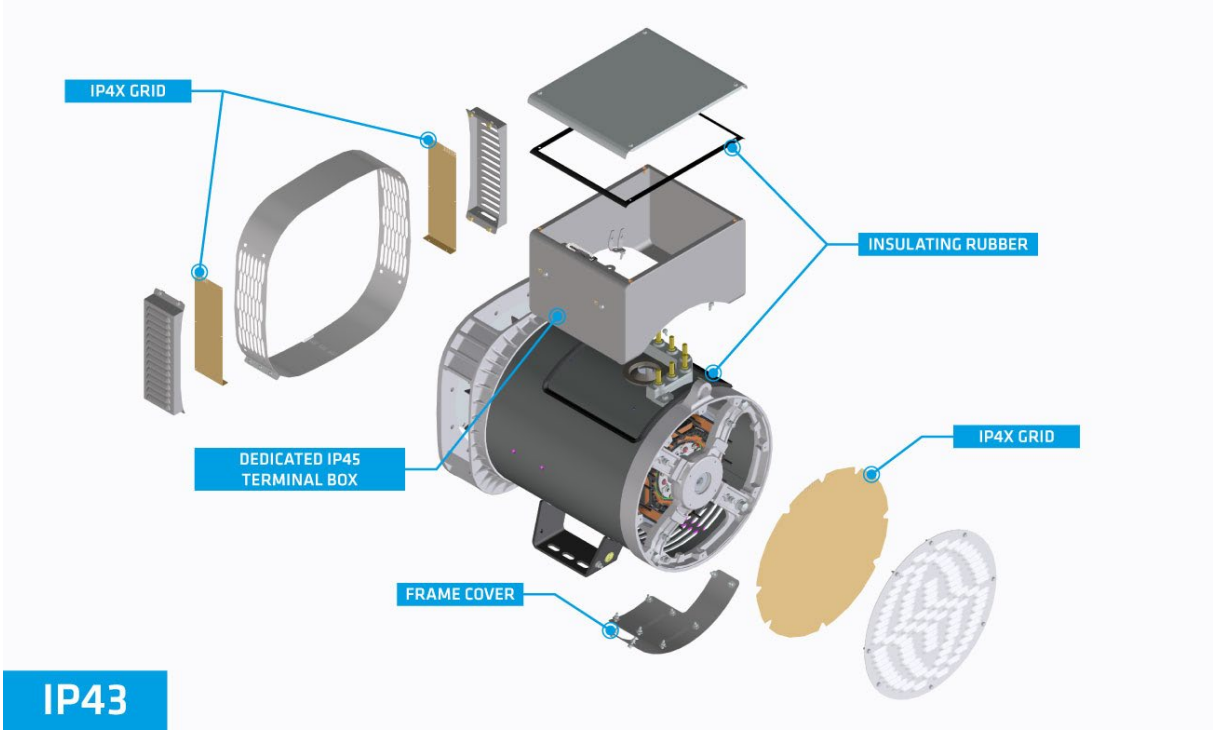

In this image you can see the available configuration we defined as IP43.

The degree of protection of the terminal box is IP45 but the degree of protection of the complete generator will remain IP43 (as written in the nameplate) and due to the fact that we fit some grids on the front side, on the rear side and we close the bottom openings of the frame, we need to apply a derating factor of 7% on the output power value.

IP	Derating
43	7%

IP45

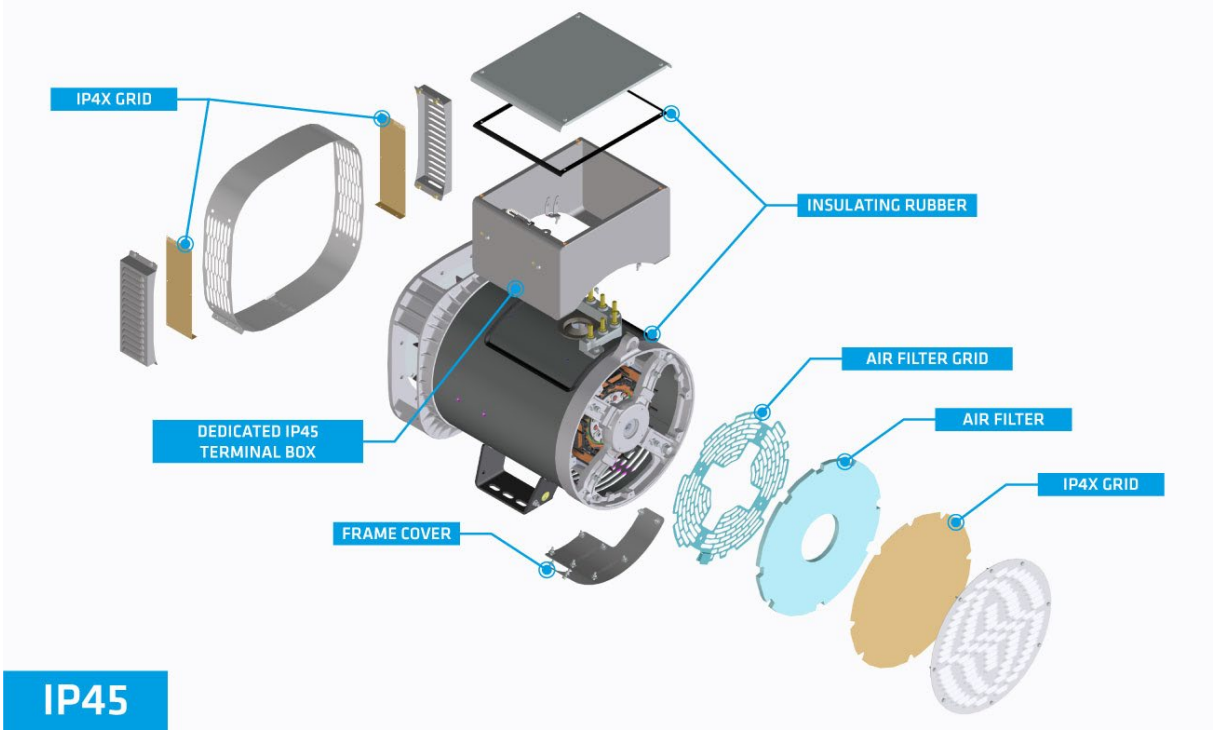

In this image you can see the available configuration we defined as IP45.

The degree of protection written in the nameplate is IP45 and, due to the fact that we fit some grids on the front side, on the rear side, we close the bottom openings of the frame and we fit an air filter, we need to apply a derating factor of approximately 20% on the output power value. For accurate power, please consult DDS.

IP	Derating
45	20%

Components present in the different IP codes of the alternators.

	IP 23	IP 23 DP	NDE IP 43	IP 45 TB	IP 43	IP 45
ECP 3 C	●					
ECP 4 C	●					
ECP 28 C	●	●		●	●	●
ECP 30 C	●	●		●		
ECP 32 C	●	●		●	●	●
ECP 34 C	●	●		●	●	●
ECO 38 C	●	●	●	●	●	●
ECO 40 C	●	●	●	●	●	●
ECO 43	●	●	●	●	●	●
ECO 46	●	●	●	●	●	●

	IP 23	IP 23 DP	NDE IP 43	IP 45 TB	IP 43	IP 45
NDE Air Filter		●				●
NDE Air Filter Grid		●				●
Frame Cover		●	●		●	●
IP2X DE Grid	●	●	●	●		
IP2X NDE Grid	●	●	●	●	●	●
IP4X DE Grid					●	●
IP4X NDE Grid					●	●
Insulating Rubber				●	●	●
IP23 Box	●(A)	●(A)	●			
IP43 Box	●(B)	●(B)				
IP45 Box				●	●	●

(A)=IP 23 STANDARD BOX FROM ECP32 TO ECO46

(B)=IP 43 STANDARD BOX FROM ECP3 TO ECP30

NDE = NON DRIVE END SIDE / DE = DRIVE END SIDE