M55 30090-00001 Breakdown

Validity date: 14/08/2024

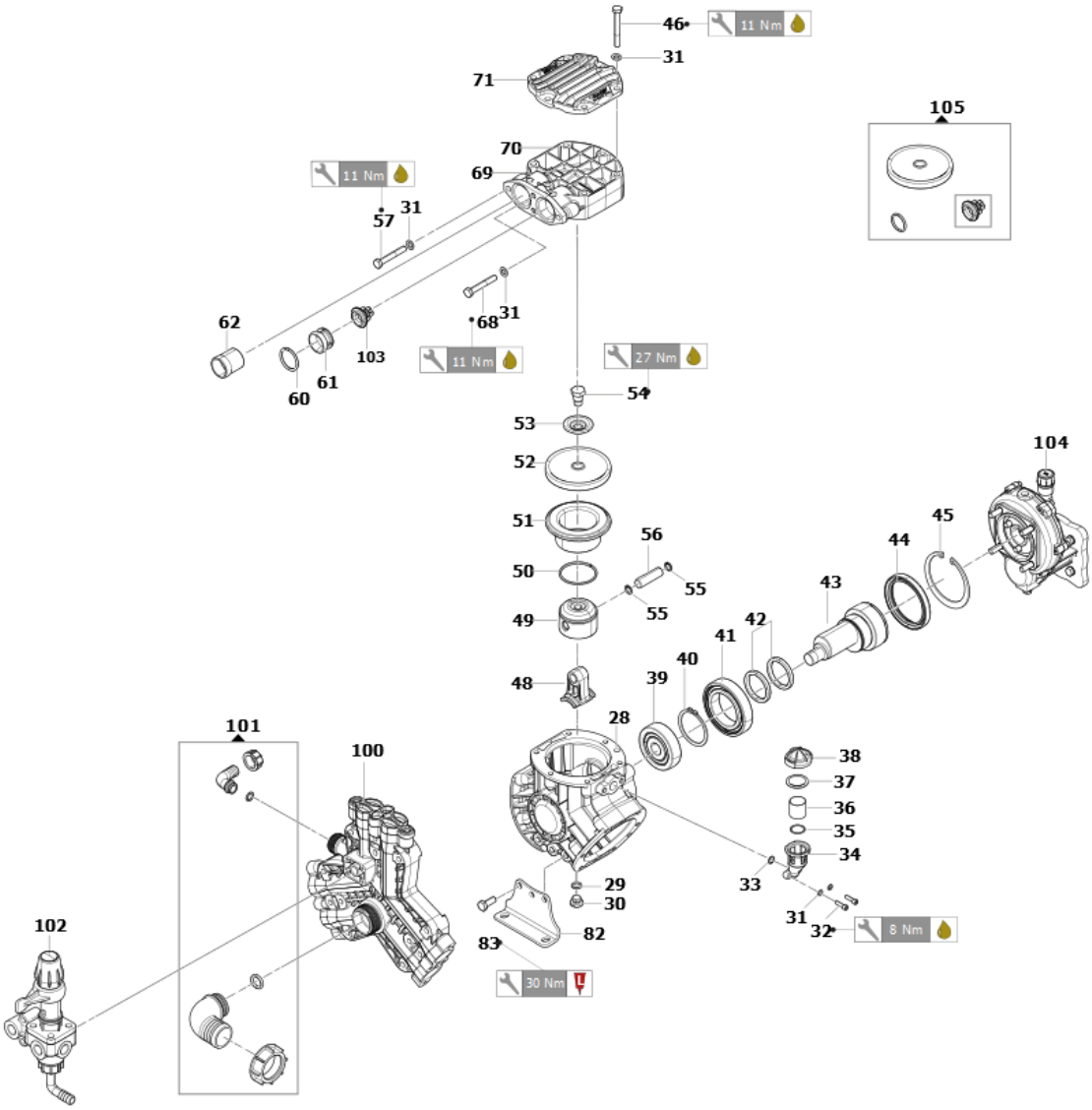

Pos.	Old code	Code	Description
28	0403042000	00041-00335	CRT MP55-P40/20
29	1210004400	00005-00419	GUOR 2,62X 9,92
30	3200001000	00008-00012	TP TCEI CH6 1/4GAS OT NICHELATO
31	2811010800	00051-00173	RONDELLA PIANA D.8X17 SP.1.6 UNI6592 INOX
32	3609023000	00049-01331	VITE TCEI M8X30 UNI 5931 INOX
33	1210004600	00005-00421	GUOR 2,62X 17,13
34	0421003500	00010-00144	COMP VOL OLIO SPECIALE APS41
35	1210003000	00005-00404	GUOR 3,53X 39,69
36	1809000100	00054-00325	MURATA COMP VOL
37	1800000100	00006-00001	MEMBR COMP VOL
38	0402052200	00039-00563	COP COMP VOL BPV500 - IDS
39	0438015000	00045-00234	CUSC 1CSF 20X 72X19-6404
40	3019000100	00002-00001	SEEGER ES 55 C75
41	0438000100	00045-00111	CUSC 1CSF 55X 90X18-6011

Pos.	Old code	Code	Description
42	0010002600	00001-00965	ANL TB 52X42X6
43	0001072800	00015-00500	AENP 6F X MP55
44	0019008500	00003-00071	ANL TEN 70X90X10 DOPPIO L
45	3020000200	00002-00059	SEEGER I 90 C72
46	3607028800	00049-00234	VTE M 8X 65 UNI5737-A2
48	0205010600	00061-00173	BI 3SET P40/20
49	2409006700A	00016-00260	PIS D58
50	0020000800	00001-00971	ANL COMPR D58X2 X2,3
51	0400011600	00021-00112	CAMICIA D58 X 7,4 MP55 (GIALLO)
52	1800008800	00006-00069	MEMBR POMPA NITR D100
53	0602004300	00019-00039	DISCO TEN MEMBR MPL
54	3605011600	00050-00094	VS TEN MEMBR M12X1,5 CH19 AISI316L
55	3020002900	00002-00082	SEEGER I 14 C72
56	3011002100	00053-00274	SPINOTTO D14X47,5
57	3607028200	00049-00228	VTE M 8X 55 UNI5737-A2
60		00005-02545	GUOR 4,0 X 33 VT 70SH
61	0601046300	00035-00420	DIST PP X VAM ASP. MP55-P40/20
62	0601045700	00035-00414	DIST X VAM MANDATA MP55-P40/20
68	3607030700	00049-02353	VTE M 8X 70 UNI5737-A2
69	3218056300	00027-00535	TE DX P40/20 (POLIPROPILENE)
70	3218056400	00027-00536	TE SX P40/20 (POLIPROPILENE)
71	0460007000	00039-00770	CALT X TE MP55
82	2400017100	00071-05557	PI POMPA MP55-P40/20 ALTO
83	3607019500	00049-01535	VITE TE M10X20 UNI 5739 INOX
100	0501035500	10002-14670	K COLLT P40/20 MONOLITICO
101		10001-13354	K SFUSI P55/20 MON. VR. VALLEY
102		42001-00838	GCP20 MEMBR VALLEY
103	1220010500A	10002-09559	GVAM P40/20
104	5005021600	10001-04659	K RID=1:6,44 X 4T
105		10001-13499	K RICAMBI MANUT ORD P40/20 MON.VALLEY

10002-14670: K COLLT P40/20 MONOLITICO

Validity date: 14/08/2024

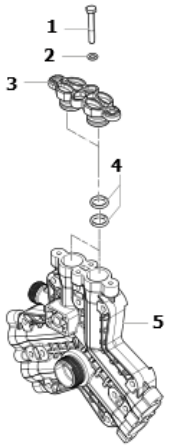

Pos.	Old code	Code	Description
1	3609035100	00049-02295	VTCEI M 8X 22 UNI5931-A2
2	2811000400	00051-00054	RT 8,4X14X1,6 UNI6592/R40-ZB
3	3202050400	00008-01319	TP COLLT P40/20 (PP)
4		00005-02544	GUOR 4,0 X 25 VT 70SH
5	0415010400	00007-00401	COLLT P40/20 (PP) MONOLITICO

10001-13354: K SFUSI P55/20 MON. VR. VALLEY

Validity date: 14/08/2024

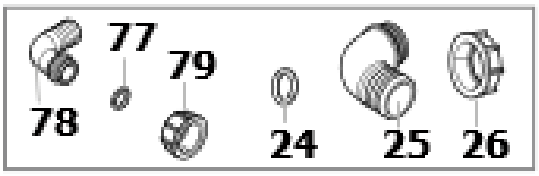

Pos.	Old code	Code	Description
24	1210021000	00005-00570	GUOR 3,0 X 29 VT
25	2801009000	00009-00307	RPGC D25 MPL X GAL 11/2
26	1200005400	00036-00110	GAL 1''1/2 GAS
77	1210048100	00005-00749	GUOR 3,0 X 19 VT
78	2801011000	00009-00327	RPGC D20 MPL X GAL 1
79	1200004900	00036-00106	GAL G1 X GRH

42001-00838: GCP20 MEMBR VALLEY

Validity date: 14/08/2024

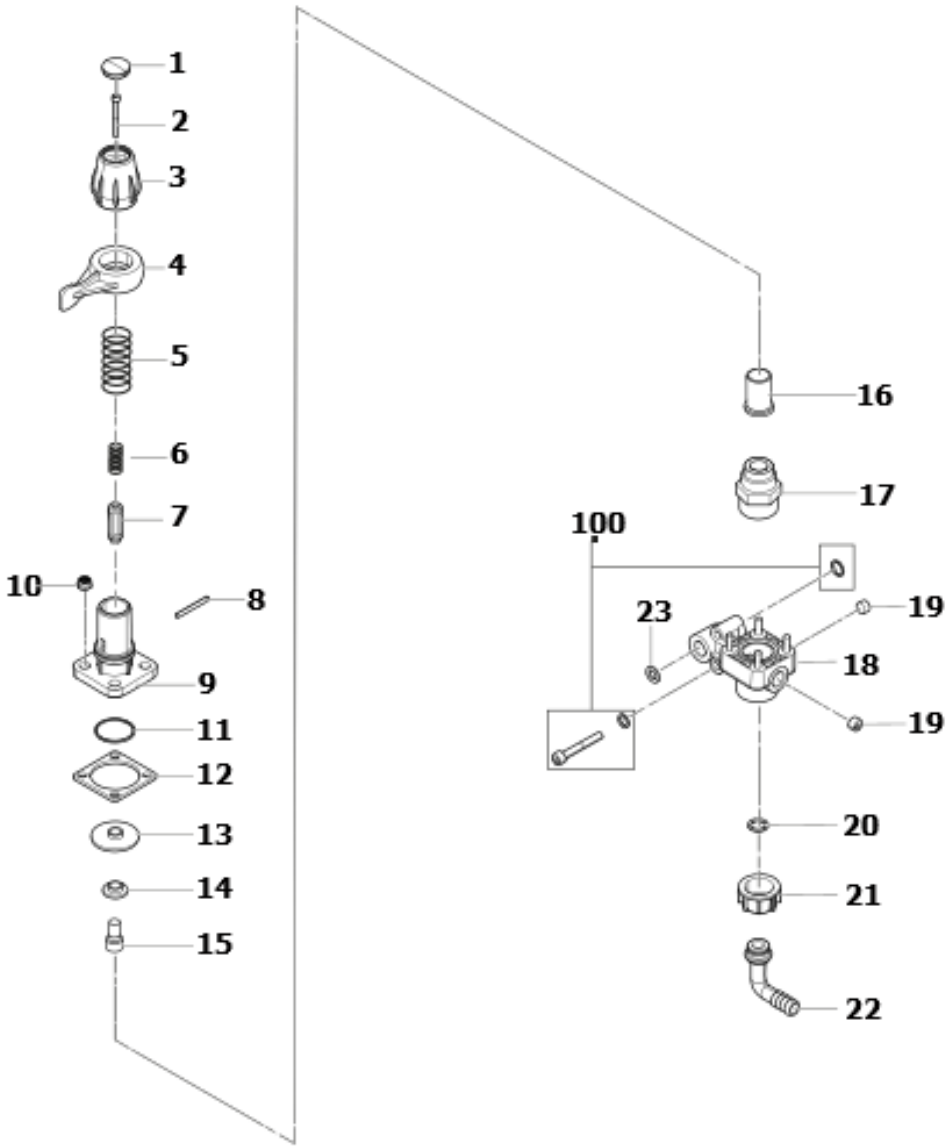

Pos.	Old code	Code	Description
1	3202025400	00008-00476	TP X GAL REG PR (VERDE)
2	3609011300	00049-00360	VTCEI M 4X 45 UNI5931-8.8
3	1223009900	00036-00182	GAL REG MO PR (GRIGIO-D)
4	1600007600	00026-00053	LEVA C SC GRIGIA
5	1802005300	00030-00030	MO DE22 X61,5-FILO D3,7
6	1802006700	00030-00043	MO DE 8 X23,7-FILO D1,2
7	2426001500	00018-00008	PATTINO VA REG
8	3005002700	00053-00016	SPINA 4 X40 GEOMET
9	0424023900B	00040-00234	CORP VA REG
10	0604001000	00049-00864	DE M 6 UNI5587-6S
11	1210046200	00005-00731	GUOR 3,53X 29,75
12	2403006100	00071-01610	PIASTR SERR VA REG
13	1800004000	00006-00037	MEMBR VA REG
14	3600002200	00023-00018	VA PR
15	3609004700	00049-00298	VTCEI M 6X 14 UNI5931-A2
16		00024-00768	SE VA PR AISI 316 GCP 40L
17	2000020200	00009-03485	NIPPLO M/M G3/4-M30X2 L=37,7 PP
18	0424059400	00040-01389	CORP GCP 2V NEW PP
19	3200001900	00008-00023	TP GC3/8X10 E IN DIN906

Pos.	Old code	Code	Description
20	1210008600	00005-00460	GUOR 2,62X 13,10 VT
21	1200005900	00036-00115	GAL G3/4''
22	2801007600	00009-00293	RPGAC D19 X GAL G3/4
23	1210006500	00005-00441	GUOR 2,62X 22,22 VT
100	0199322400	10001-11657	K SFUSI GCP 2V VT INOX

10002-09559: GVAM P40/20

Validity date: 14/08/2024

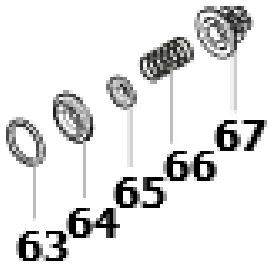

Pos.	Old code	Code	Description
63	1210083800	00005-01040	GUOR 4,0 X 24 VT 70SH
64	3009025700	00024-00229	SE VAM P40/20 AISI 316-L
65	3604003300	00024-00266	VA VAM INOX 316-L
66	1802042500	00030-00798	MO DE11 X17-FILO D0,8 AISI316
67	1205004400	00024-00354	GAB VAM MPL BLU RAL 5015

10001-04659: K RID=1:6,44 X 4T

Validity date: 14/08/2024

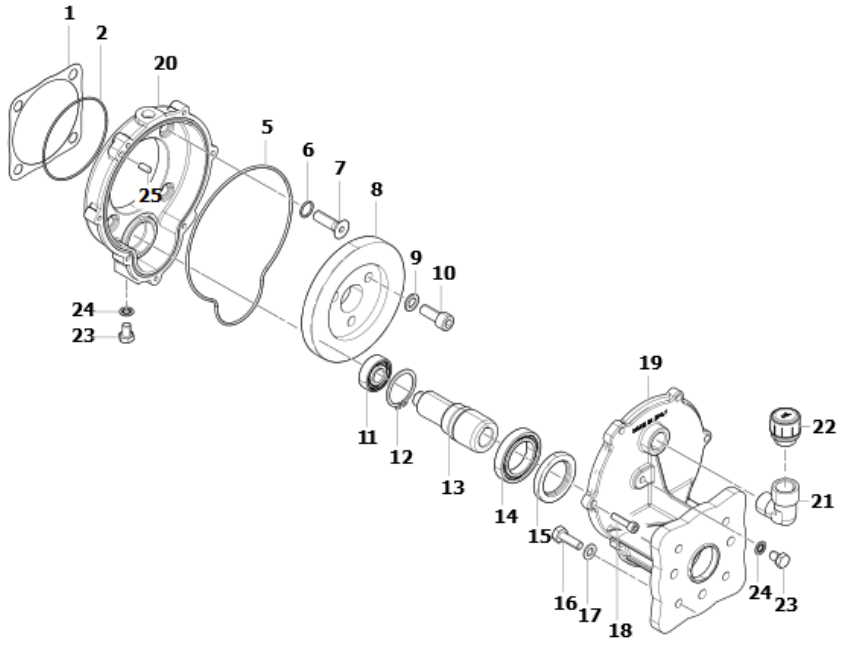

Pos.	Old code	Code	Description
1	1201002100	00005-00019	GU SCAT RID
2	1210056200	00005-00784	GUOR 1,78X 85,34
5	1210008900	00005-00463	GUOR 2,62X152,07
6	1210009300	00005-00467	GUOR 1,78X 14
7	3621000600	00049-00608	VTSPEI M10X 35 UNI5933-10.9 BRUNITA
8	0409001400A	00063-00045	COR DENT X MOT 4T
9	2811009800	00051-00080	RT 10,5X18X2 R40 UNI 1750 GEOMET
10	3609002200	00049-00276	VTCEI M10X 25 UNI5931-8.8 ZB
11	0438005400	00045-00149	CUSC 1CSF 15X 35X11-6202
12	3019000400	00002-00125	ANELLO SEEGER X ALBERI D.035 UNI 7435-35
13	2402015200	00063-00219	PIGN X MOT 4T ALB 3/4
14	0438006800	00045-00163	CUSC 1CSF 35X 55X10-61907
15	0019010900	00003-00094	ANL TEN 35X52X7
16	3607011900	00049-00090	VTE 5/1624 UNF X 1 2A-8.8 (ZB)
17	2811000400	00051-00054	RT 8,4X14X1,6 UNI6592/R40-ZB
18	3609004100	00049-01095	VITE TCEI M6X25 UNI 5931 ZNT
19	3002055900	00071-00958	Supporto scatola riduttore motore 4T
20	3001015100A	00076-00077	Scatola riduttore
21	1211002300	00009-01662	GOM M/F G1/2-G1/2 OT

Pos.	Old code	Code	Description
22	3200008200	00008-00085	TP CRCO OLIO G1/2 ANTISBATTIMENTO
23	3607021400	00049-00163	VTE M 8X 12 UNI5739-8.8
24	1209010700A	00005-00329	GU NOR BONDED SEAL M 8 AUTOCENTRANT
25	2818000500	00060-00004	RUL X PIS

10001-13499: K RICAMBI MANUT ORD P40/20 MON.VALLEY

Validity date: 14/08/2024

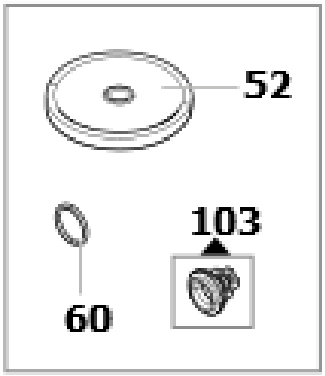

Pos.	Old code	Code	Description
52	1800008800	00006-00069	MEMBR POMPA NITR D100
60		00005-02545	GUOR 4,0 X 33 VT 70SH
103	1220010500A	10002-09559	GVAM P40/20

10001-11657: K SFUSI GCP 2V VT INOX

Validity date: 14/08/2024

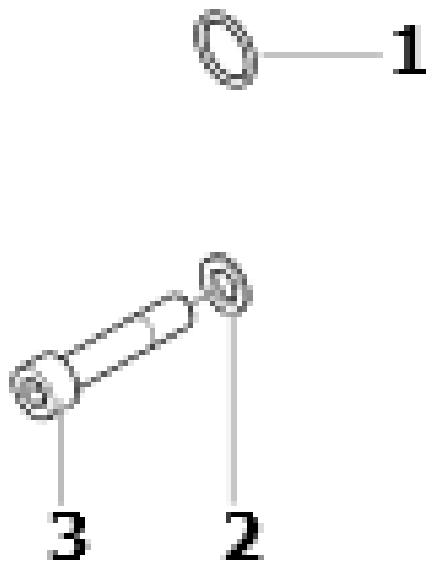

Pos.	Old code	Code	Description
1	1210048100	00005-00749	GUOR 3,0 X 19 VT
2	2811010800	00051-00173	RONDELLA PIANA D.8X17 SP.1.6 UNI6592 INOX
3		00049-02365	VTCEI M 8X 45 UNI5931-A2

10002-09559: GVAM P40/20

Validity date: 14/08/2024

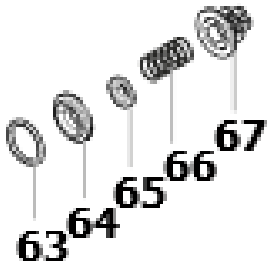

Pos.	Old code	Code	Description
63	1210083800	00005-01040	GUOR 4,0 X 24 VT 70SH
64	3009025700	00024-00229	SE VAM P40/20 AISI 316-L
65	3604003300	00024-00266	VA VAM INOX 316-L
66	1802042500	00030-00798	MO DE11 X17-FILO D0,8 AISI316
67	1205004400	00024-00354	GAB VAM MPL BLU RAL 5015