

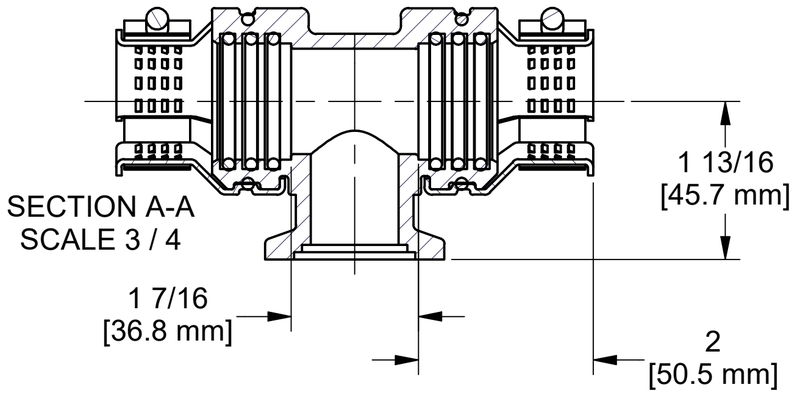

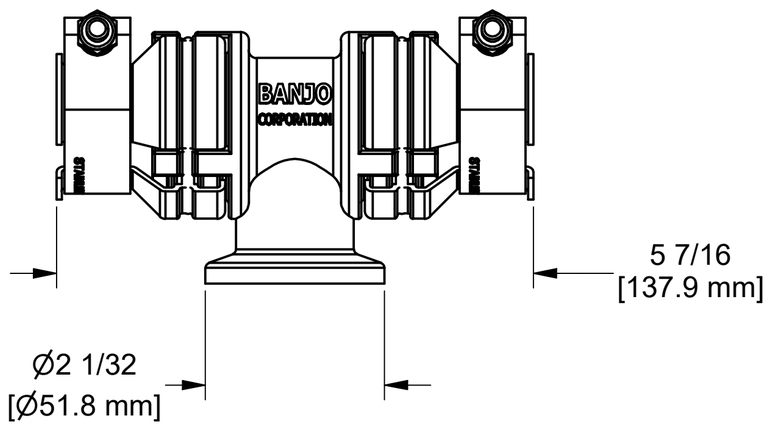

PARTS LIST			
ITEM	QTY	PART NUMBER	DESCRIPTION
1	6	A219	AS568A -219 O-RING, EPDM, BLACK
2	2	DM20265E	AS568A -224 O-RING, EPDM, BLACK
3	1	MPA1001T	1" MANIFOLD PIPE ADAPTER TEE BODY, MACHINED
4	6	MPA1002	Pipe Adapter Bracket
5	2	TC130	1 5/16" - 1 11/16" T-BOLT CLAMP

NOTES:

LUBRICATE INTERNAL A219 O-RINGS BEFORE INSTALLING ON PIPE.

CLAMP TORQUE: 65-85 IN-LBS.

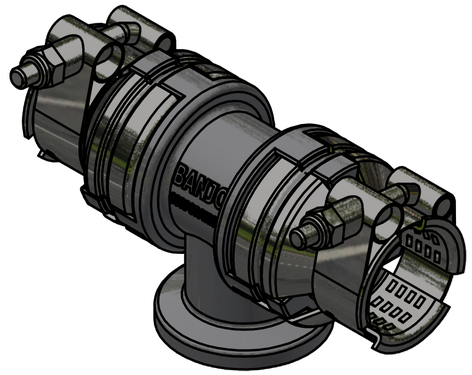

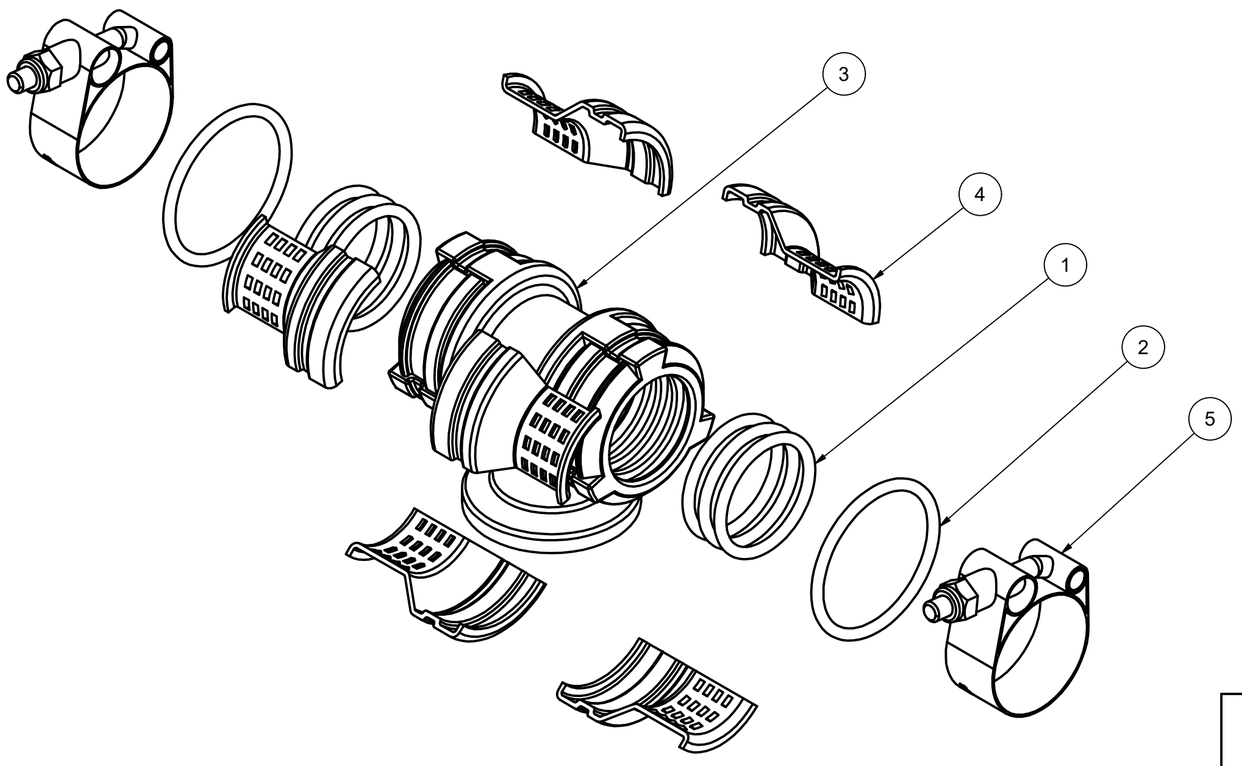

THIS DRAWING AND ALL INFORMATION CONTAINED THEREON ARE THE EXCLUSIVE PROPERTY OF BANJO CORPORATION.

UNLESS SPECIFICALLY NOTED, THIS DRAWING AND ITEMS SHOWN ON THIS DRAWING ARE SUBJECT TO CHANGE AT ANY TIME.

BANJO® Liquid Handling Products

BANJO CORPORATION
A UNIT OF IDEX CORPORATION
150 BANJO DRIVE, CRAWFORDSVILLE, IN 47933
WEB SITE: WWW.BANJOCORP.COM
E-MAIL: BANJOSALES@IDEXCORP.COM

DESCRIPTION:
1" MANIFOLD PIPE ADAPTER TEE

PART NUMBER:
M100PAT