Part NO	MESH SCREEN	WIRE DIA	OPENING	MATL
LST204SS	4	0.047	0.203	316SS
LST206SS	6	0.035	0.132	316SS
LST208SS	8	0.028	0.097	316SS
LST210SS	10	0.025	0.075	316SS
LST216SS	16	0.018	0.044	316SS
LST220SS	20	0.016	0.034	316SS
LST230SS	30	0.012	0.021	316SS
LST250SS	50	0.009	0.011	316SS
LST280SS	80	0.0055	0.007	316SS
LST2100SS	100	0.0045	0.005	316SS
MLS250SS	50	0.009	0.011	316SS
MLS280SS	80	0.0055	0.007	316SS
MLS2100SS	100	0.0045	0.005	316SS

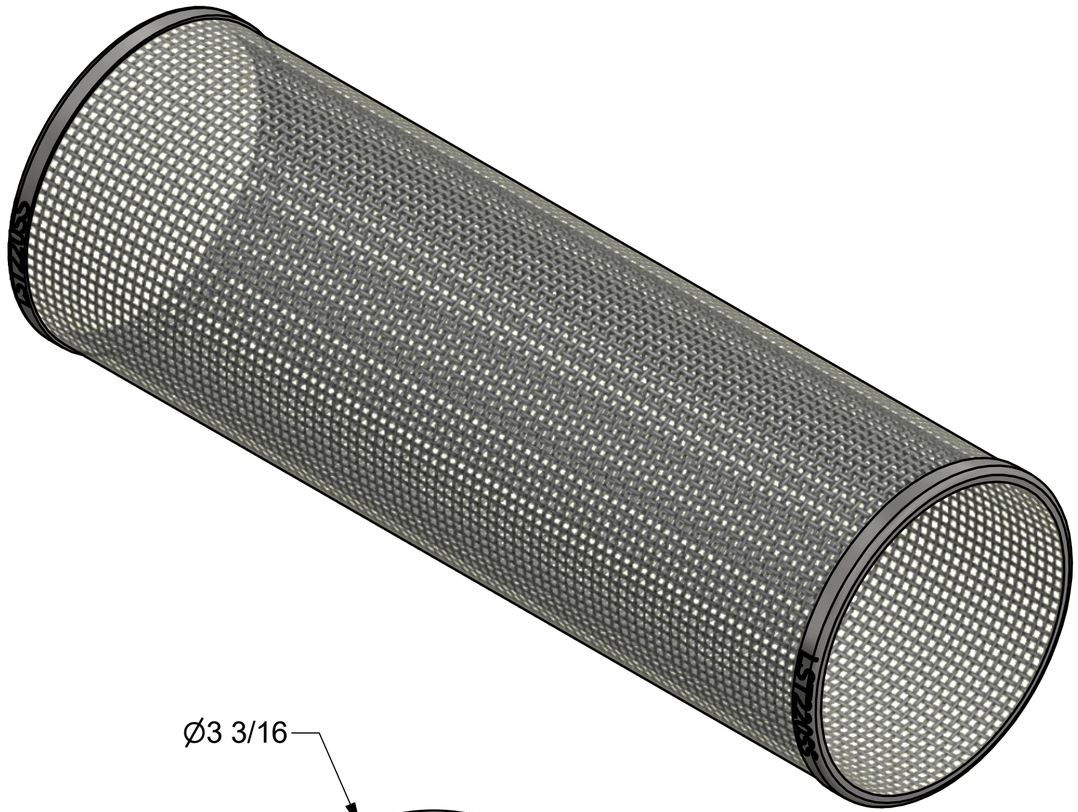

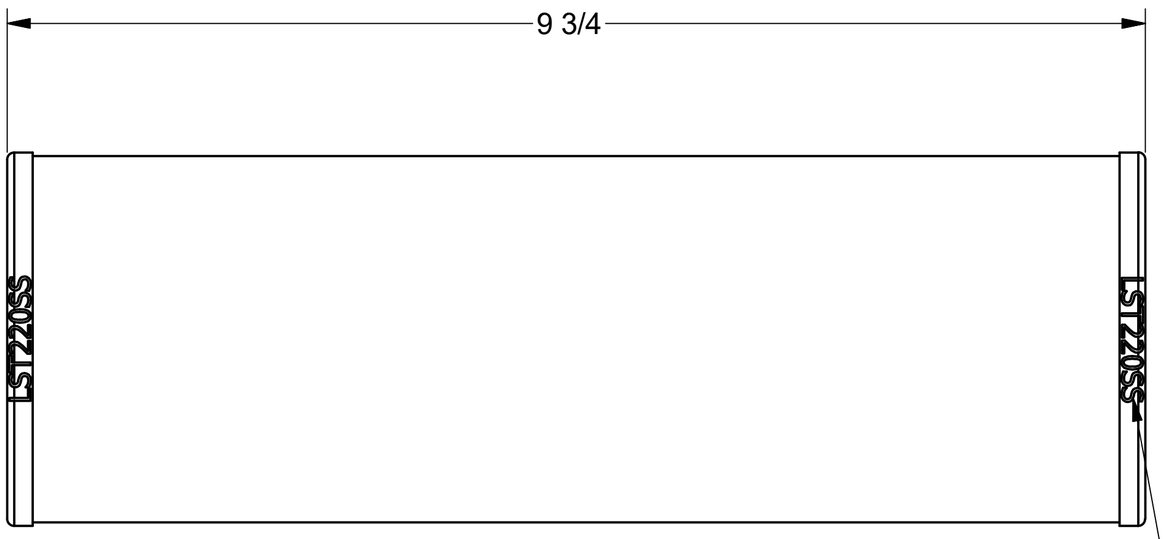

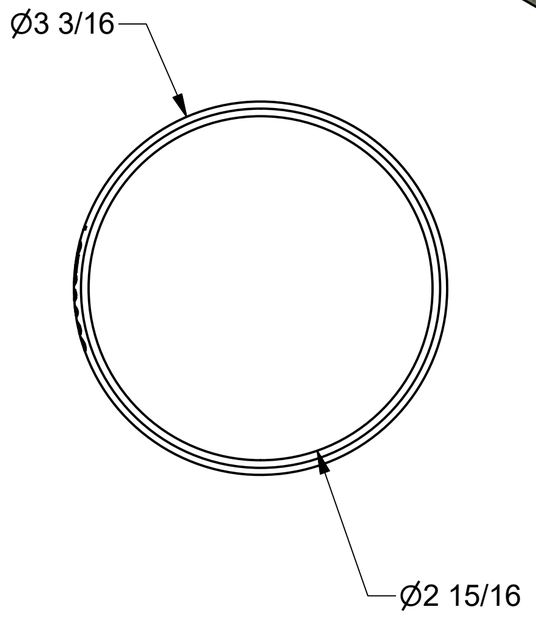

THIS DRAWING AND ALL INFORMATION CONTAINED THEREON ARE THE EXCLUSIVE PROPERTY OF BANJO CORPORATION.

UNLESS SPECIFICALLY NOTED, THIS DRAWING AND ITEMS SHOWN ON THIS DRAWING ARE SUBJECT TO CHANGE AT ANY TIME.

BANJO CORPORATION
150 BANJO DRIVE, CRAWFORDSVILLE, IN 47933
WEB SITE: WWW.BANJOCORP.COM
E-MAIL: SALES1@BANJOCORP.COM

DESCRIPTION
2" LST SCREEN - 20 MESH

PART NUMBER
LST220SS