Parts List			
ITEM	QTY	PART NUMBER	DESCRIPTION
1	1	CE050D	CE DECAL
2	1	LST075-H	3/4" T-STRAINER HEAD
3	1	LST100-B	3/4" & 1" POLY TEE STRNR BOWL
3-1	1	12777	1/2" DRAIN PLUG
3-2	1	LST100-XB	1" T-STRAINER BOWL
3-3	1	UV15163	#114 O'RING, EPDM
4	1	LST100-G	#226 O-RING
5	1	LST116	1" LST SCREEN - 16 MESH
6	1	LST1300D	300 PSI DECAL

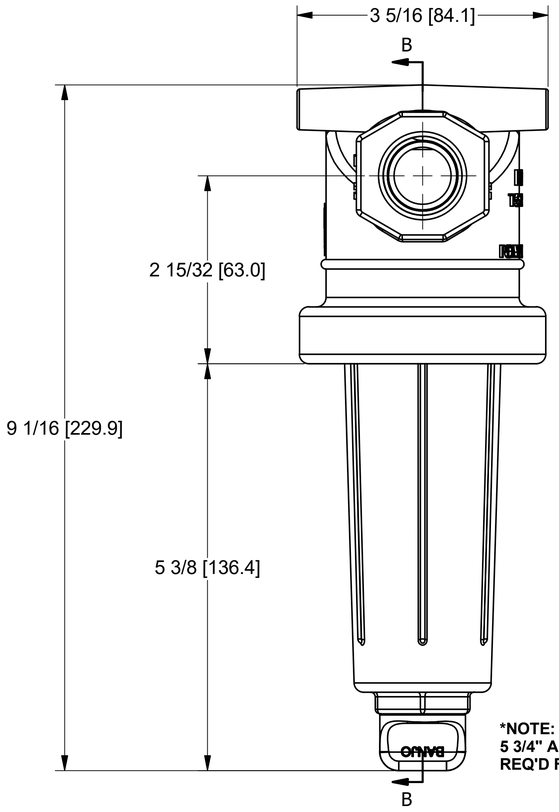

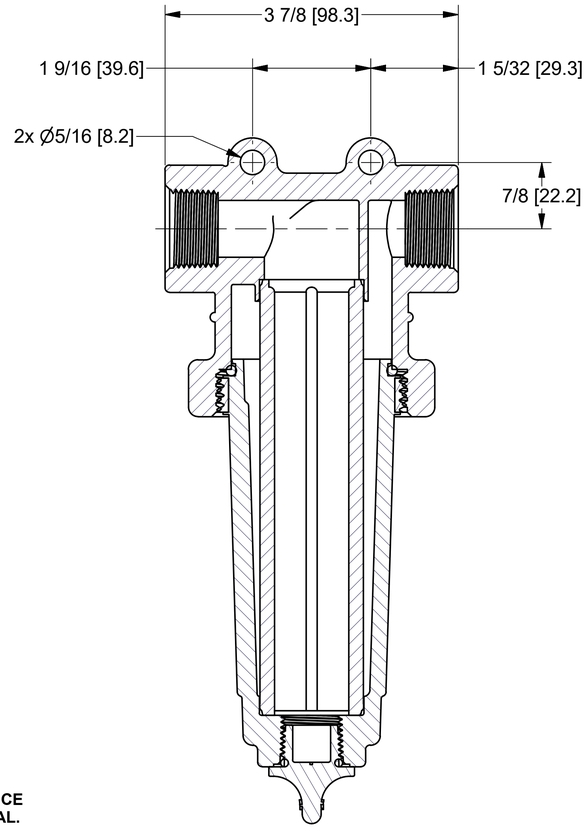

***NOTE:**
5 3/4" ADDITIONAL CLEARANCE REQ'D FOR SCREEN REMOVAL.

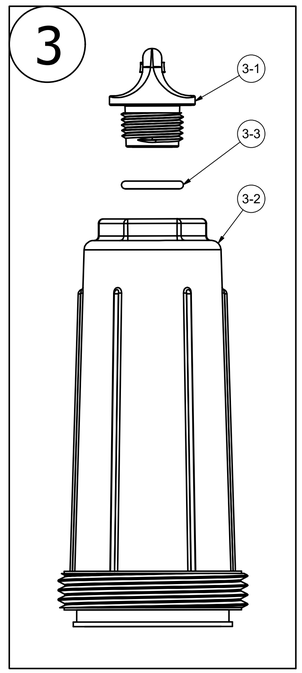

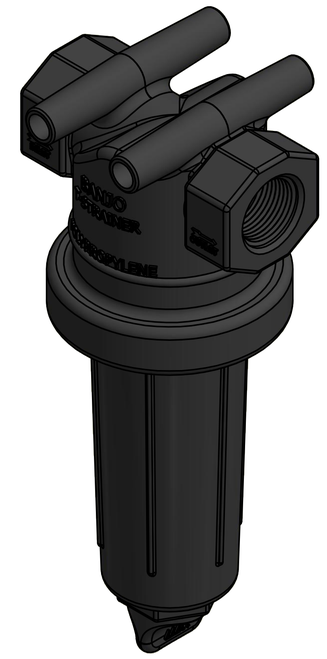

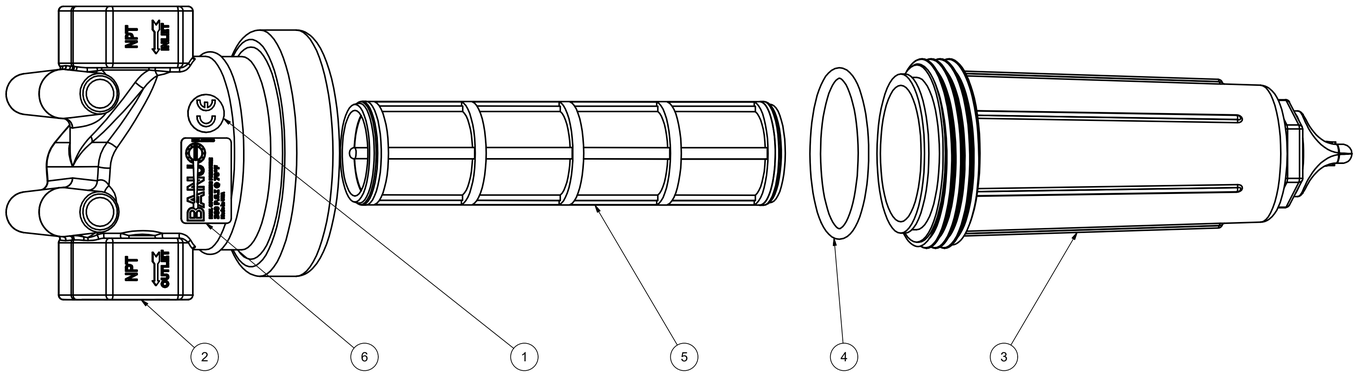

BANJO CORPORATION

THIS DRAWING AND ALL INFORMATION CONTAINED THEREON ARE THE EXCLUSIVE PROPERTY OF BANJO CORPORATION.

UNLESS SPECIFICALLY NOTED, THIS DRAWING AND ITEMS SHOWN ON THIS DRAWING ARE SUBJECT TO CHANGE AT ANY TIME.

BANJO CORPORATION
150 BANJO DRIVE, CRAWFORDSVILLE, IN 47933
WEB SITE: WWW.BANJOCORP.COM
E-MAIL: BANJOSALES@IDEXCORP.COM

DESCRIPTION
3/4" POLY TEE STRAINER 16 MESH

PART NUMBER
LST075-16