Parts List			
ITEM	QTY	PART NUMBER	DESCRIPTION
1	1	LS206	2" LS SCREEN - 6 MESH
2	1	LSQ200-B	2" LINE STRAINER BODY W/ MALE ADAPTER BOWL
3	1	LSQ200-C	LSQ LINE STRAINER CAP
4	1	LST1100D	100 PSI DECAL (N/S)

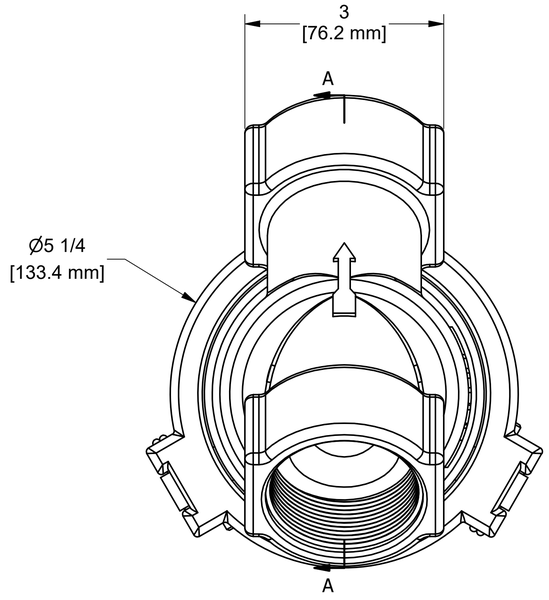

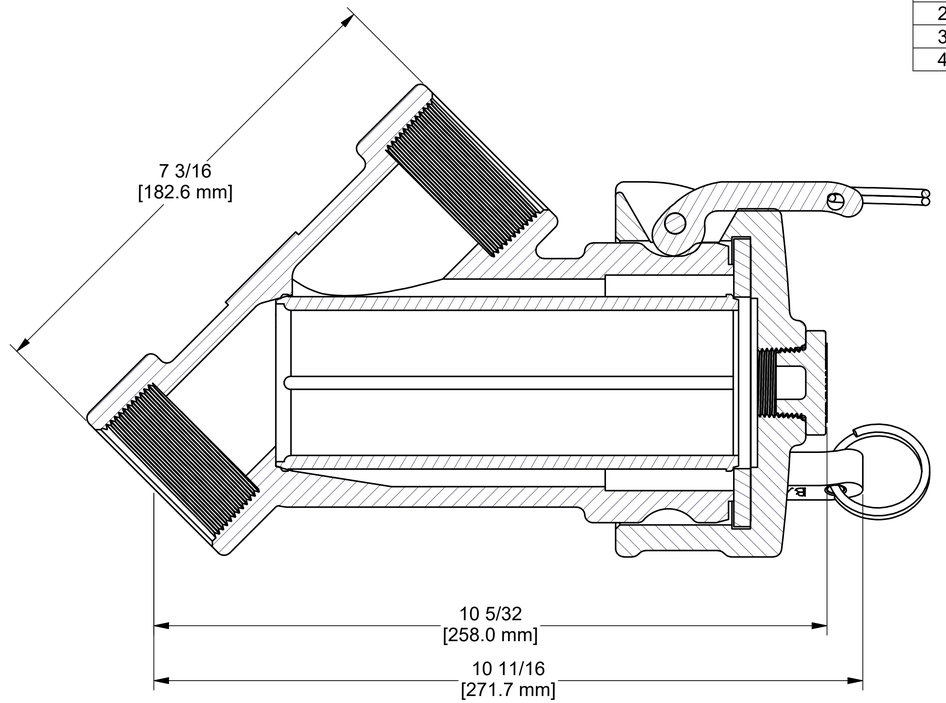

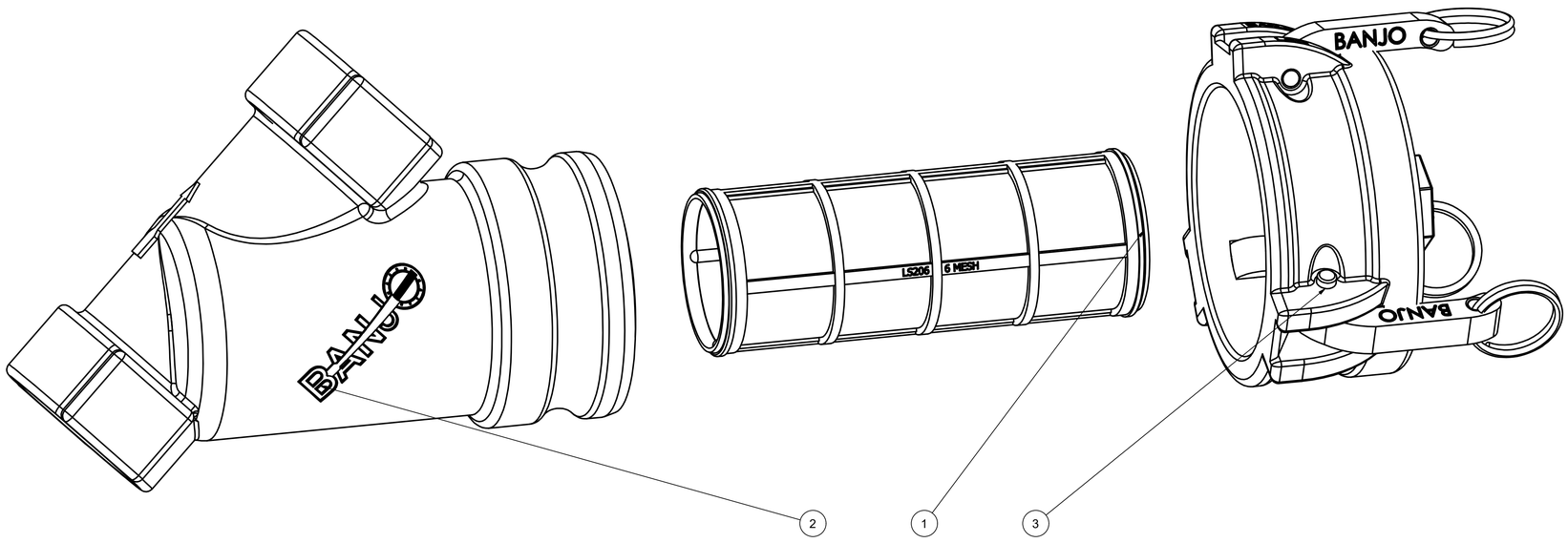

NOTE:
ADDITIONAL CLEARANCE REQ'D FOR SCREEN REMOVAL: 7"

THIS DRAWING AND ALL INFORMATION CONTAINED THEREON ARE THE EXCLUSIVE PROPERTY OF BANJO CORPORATION.

UNLESS SPECIFICALLY NOTED, THIS DRAWING AND ITEMS SHOWN ON THIS DRAWING ARE SUBJECT TO CHANGE AT ANY TIME.

BANJO CORPORATION

BANJO CORPORATION
150 BANJO DRIVE, CRAWFORDSVILLE, IN 47933
WEB SITE: WWW.BANJOCORP.COM
E-MAIL: BANJOSALES@IDEXCORP.COM

DESCRIPTION
2" NPT LINE STRAINER W/ 6 MESH SCREEN

PART NUMBER
LSQ200-06