Parts List			
ITEM	QTY	PART NUMBER	DESCRIPTION
1	1	13777	3/4" DRAIN PLUG
2	1	13778	AS568A -119 O-RING, EPDM, BLACK
4	1	LS300EC	3" LINE STRAINER END CAP
5	1	LS320	LINE STRAINER SCREEN
6	1	MLS300B1	3" LINE STRAINER BODY
7	1	MLS300CAP	3" MANIFOLD LINESTRAINER CAP, MACHINED
8	1	MLS300ECG	AS568A -352 O-RING, EPDM, BLACK
9	1	MLS300G	AS568A -437 O-RING, EPDM, BLACK

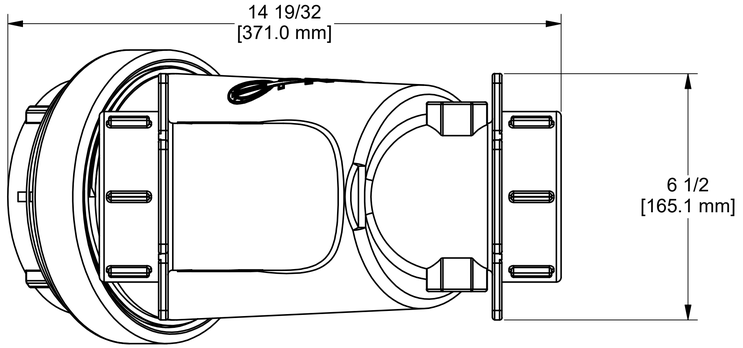

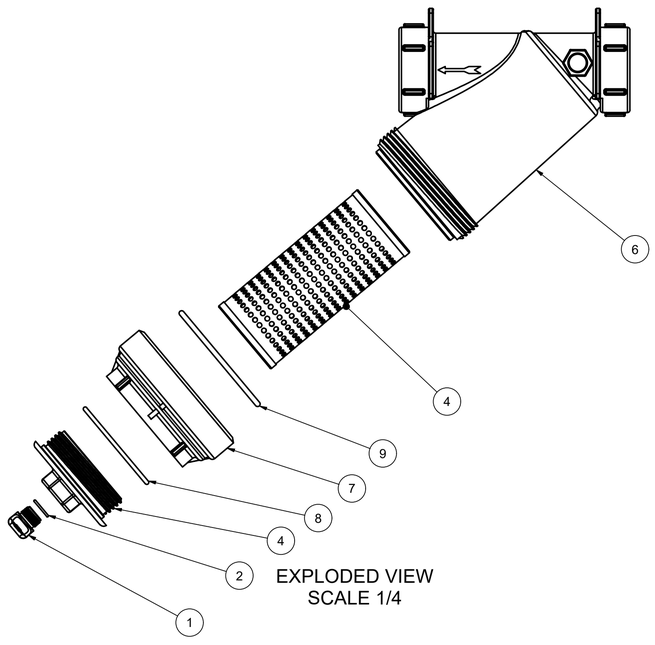

EXPLODED VIEW
SCALE 1/4

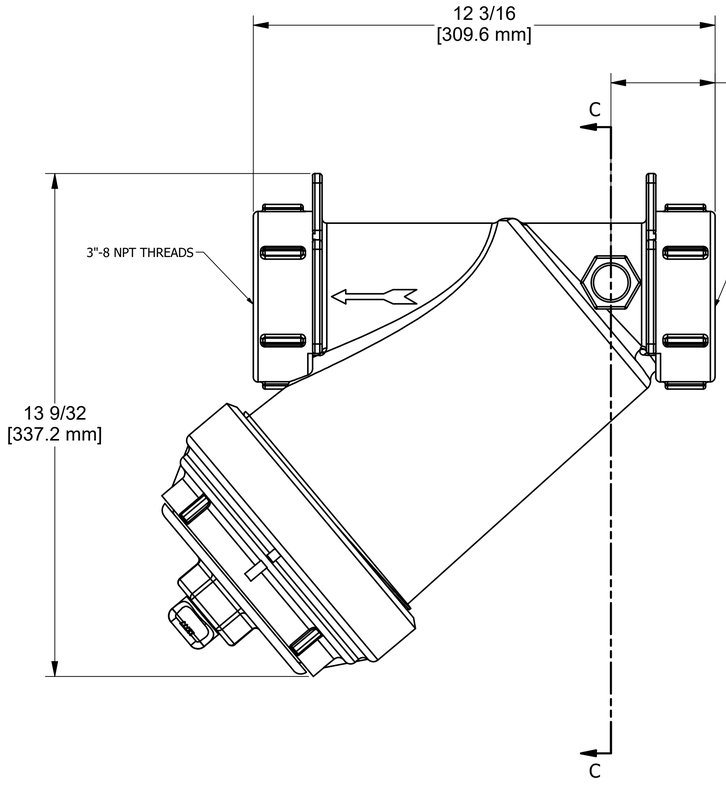

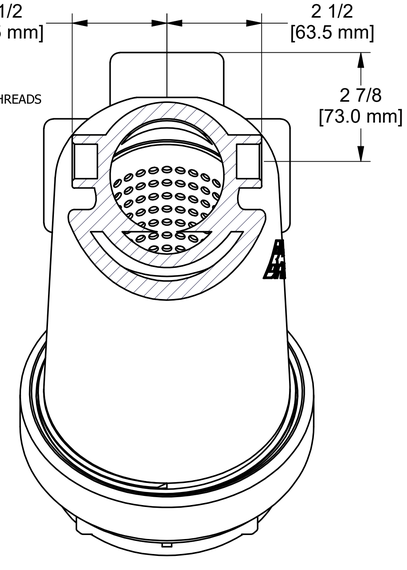

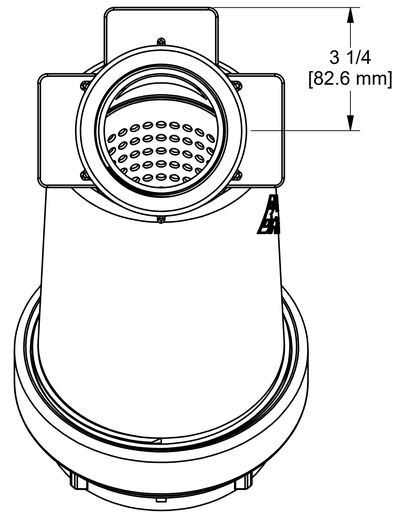

SECTION C-C
SCALE 1/2

BANJO® CORPORATION

THIS DRAWING AND ALL INFORMATION CONTAINED THEREON ARE THE EXCLUSIVE PROPERTY OF BANJO CORPORATION.

UNLESS SPECIFICALLY NOTED, THIS DRAWING AND ITEMS SHOWN ON THIS DRAWING ARE SUBJECT TO CHANGE AT ANY TIME.

BANJO CORPORATION
150 BANJO DRIVE, CRAWFORDSVILLE, IN 47933
WEB SITE: WWW.BANJOCORP.COM
E-MAIL: BANJOSALES@IDEXCORP.COM

DESCRIPTION
3" NPT LINESTRAINER W/ #20 MESH SCREEN

PART NUMBER
LSM300-20