LKN50/55/60 Series

FEATURES

- High pressure, Triplex Plunger Pump, available in 5 flows
- Drive shaft with double projection
- Incorporated gear box available in 3 ratios: 1500 RPM=2.95:1, 1750 RPM=3.158:1 and 1900 RPM=3.389:1
- Double pressure packings
- Vertically fitted suction/delivery valves
- Splash lubrication
- Optional drain/priming valve kit

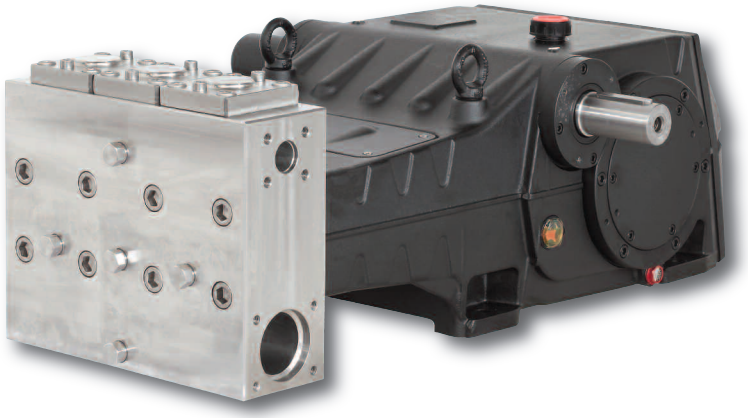

MATERIALS

- Pump body in cast iron
- Manifold made of duplex F51 Stainless Steel
- Self-adjusting spherical roller bearings on crankshaft
- Forged steel connecting rods with antifriction bearings
- Crankshaft made of nitrited, hardened and tempered alloy steel
- Cast iron plunger guides, nickel treated
- Solid ceramic plungers
- Valves made in 17-4 Stainless Steel

COMMON SPECIFICATIONS

- Maximum Inlet Pressure: . . . . . 45 PSI
- Maximum Fluid Temperature: . . . . . *140° F
- Inlet Port Thread: . . . . . 3" NPT-F
- Discharge Port Thread: . . . . . 1-1/4" NPT-F
- Shaft Diameter: . . . . . 1.969"/50 mm
- Stroke: . . . . . 3.546"/90 mm
- Pump Dimensions: . . . . . 36.4" x 26.4" x 13.7"
- Crankcase Oil Capacity: . . . . . 473.5 oz. (14 liters) . . . . . (use GP Series 220 Oil)
- Shipping Weight: . . . . . 829 lbs./376 kg

***Please consult technical guide or GP Sales Representative for Temperature/Inlet Pressure Information.**

Product Group: V

MODEL	GPM/LPM	PSI/BAR	RPM	BORE	HP
LKN5015	71.0 GPM/269 LPM	3335 PSI/300 BAR	1500 RPM	1.969 in./50 mm	161
LKN5017	77.6 PSI/294 LPM	3335 PSI/300 BAR	1750 RPM	1.969 in./50 mm	176
LKN5515	86.1 GPM/326 LPM	2755 PSI/190 BAR	1500 RPM	2.165 in./55 mm	161
LKN5517	93.7 GPM/355 LPM	2755 PSI/190 BAR	1750 RPM	2.165 in./55 mm	176
LKN6015	102.4 GPM/388 LPM	2320 PSI/160 BAR	1500 RPM	2.362 in./60 mm	161
LKN6017	111.7GPM/423 LPM	2320 PSI/160 BAR	1750 RPM	2.362 in./60 mm	176

How to order/Examples of Part Numbers: **Start with Model** **RPM (ex.: 15=1500 RPM)**

LKN55 **15**

So the Part Number in the Above Example: LKN5515 (Model is LKN55, with an RPM of 1500.)

PUMP OPTIONS

- "F" version features flushing option
- "G" version suitable for pumping high-temperature glycols (up to 140°F)

General Pump is a member of The Interpump Group

GENERAL PUMP

ACCESSORIES

REGULATORS

R1X

18.5-29.0 GPM
2900-8700 PSI
316 SS



RX3

120.0-132.GPM
1450-4350 PSI
Stainless Steel



YVS280SS

21.0 GPM
4500 PSI



SAFETY DEVICES

SX2

50.0 GPM
1450-5899 PSI



SX3

132.0 GPM
2900-4350 PSI



PULSATION DAMPENERS

A7X

16.0 GPM
3050PSI
316 SS



A15X

105.6 GPM
2150 PSI
316 SS



UNLOADERS

YVB280SS

21.0 GPM
4500 PSI



YU2122SS

21.0 GPM
2200 PSI





LKN50/55/60 series

Technical Details

OVERALL DIMENSIONS

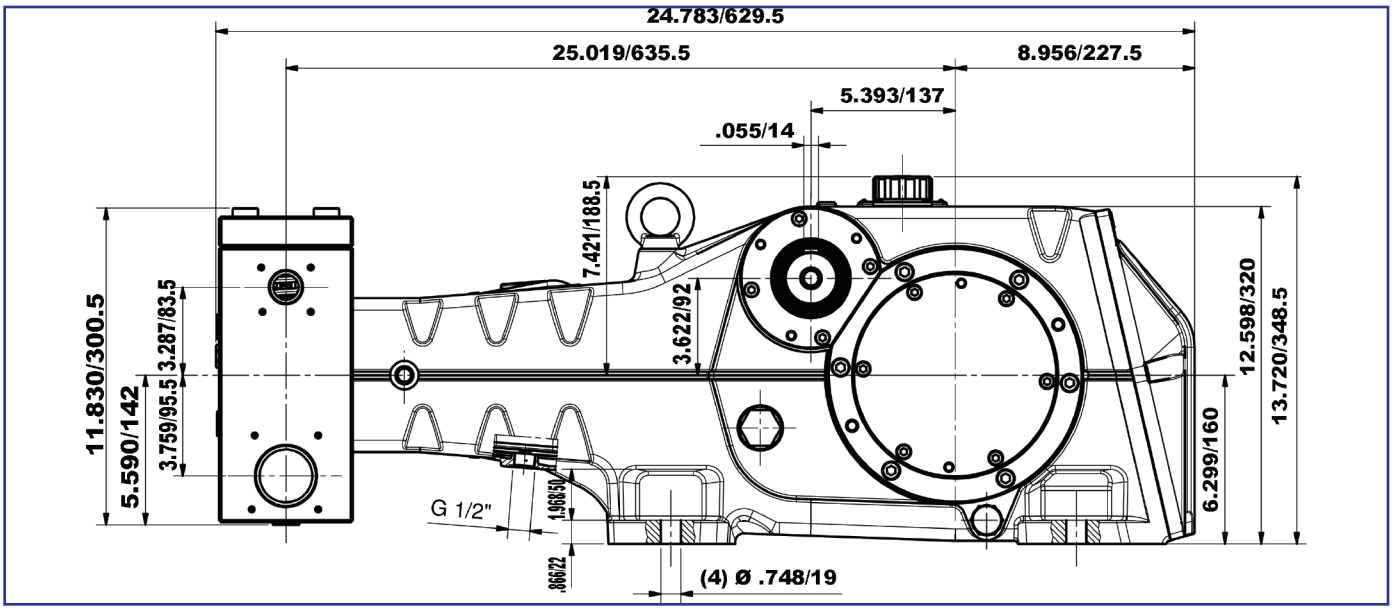

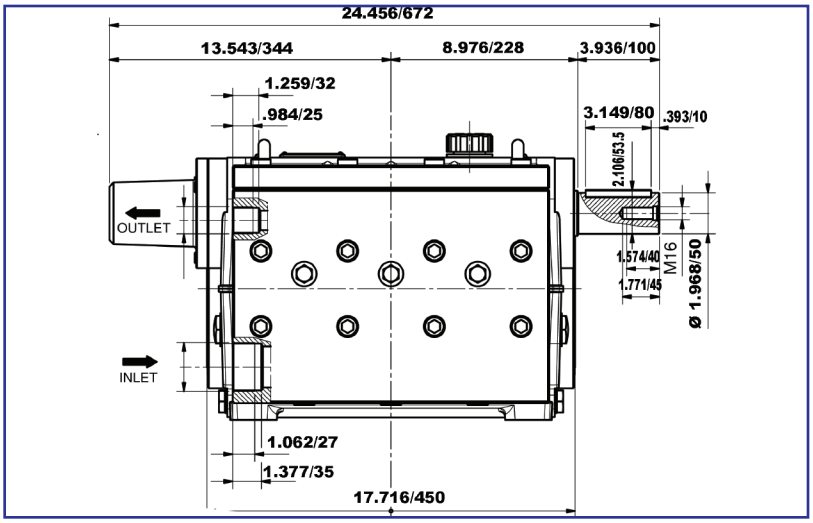

FITTINGS

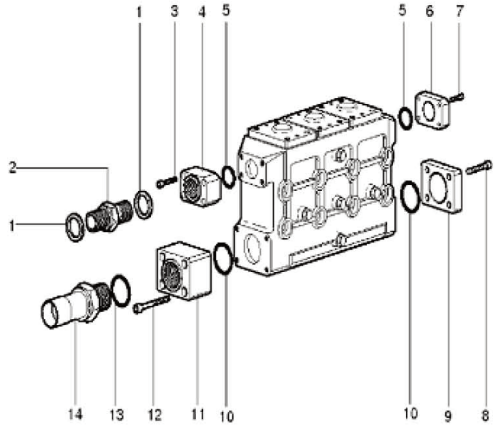

Item	P/N	Description	Kit	Kit Qty.
1	F030300090	1-1/4" Seal Ring	A	2
2	F084200190	1-1/4" G Nipple	A	1
3	F035000190	Screw, M12 x 60	B	4
4	F073200040	Mounting Block	B	1
5	F881011250	O-ring, 42 x 4	B - C	1
6	F063200090	Closed Flange	C	1
7	F871131704	Screw, M12 x 35, Spec.	C	4
8	F871125606	Screw, M10 x 30	D	4
9	F063200080	Inlet Flange	D	1
10	F881011254	O-ring, 85 x 4l	D - E	1
11	F073200030	Inlet Flange	E	1
12	F871125612	Screw, M10 x 60	E	4
13	F881011171	O-ring, 90 x 3	F	1
14	F073200020	Hose Fitting	F	1

KIT	CODE
F1174	A
F1227	B
F1228	C

KIT	CODE
F1229	D
F1230	E
F1231	F

Ref 300861 Rev A
10-11

GENERAL PUMP 1174 Northland Drive • Mendota Heights, MN 55120
Phone: 651.686.2199 • Fax: 800.535.1745 • e-mail: sales@gpcompanies.com • www.generalpump.com

GENERAL PUMP