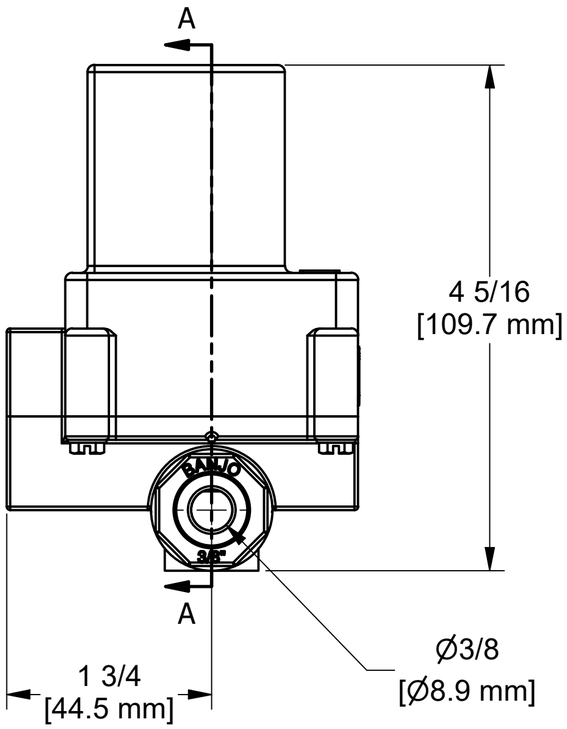

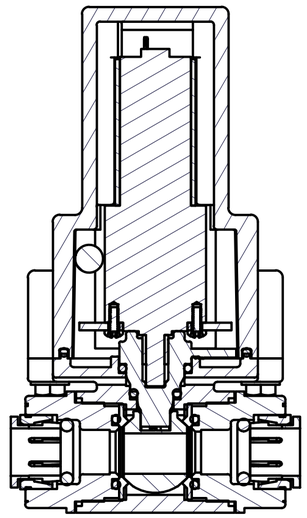

SECTION A-A
SCALE 1 : 1

PARTS LIST			
ITEM	QTY	PART NUMBER	DESCRIPTION
1	1	050DECAL	Banjo Logo Decal
2	1	12717	AS568A -011 O-RING, EPDM
3	1	12724	AS568A -014 O-RING, EPDM, BLACK
4	1	A035	2-035 O-ring, EPDM
5	1	LEV038PLX	3/8" LEV VALVE ONLY
6	1	LEV3000	3- WIRE LEV ACTUATOR ASSEMBLY
7	4	VE15220	#6x3/4"18-8SS HWH SMS

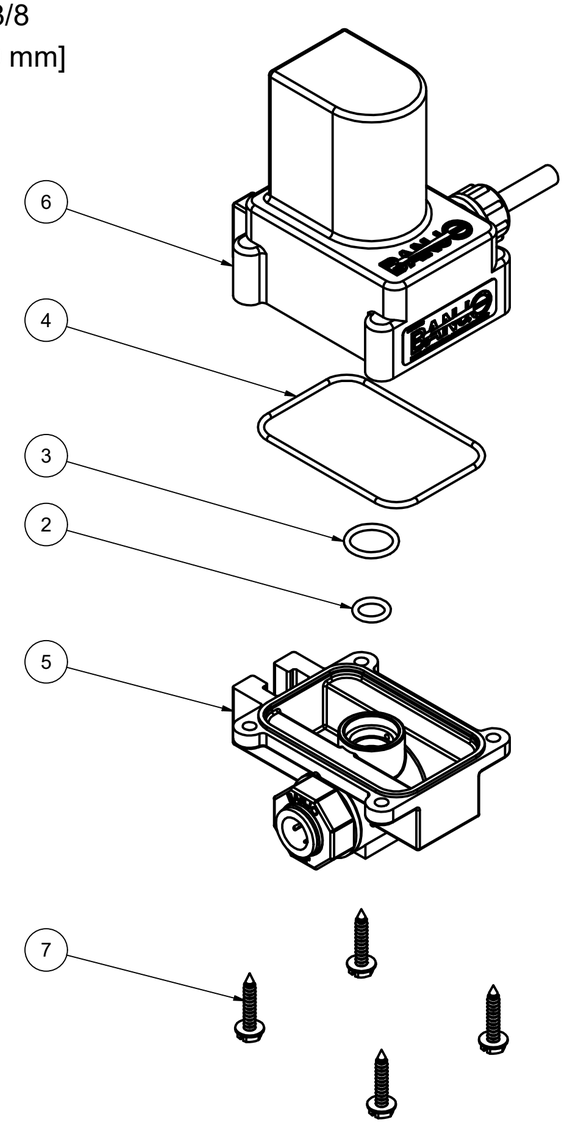

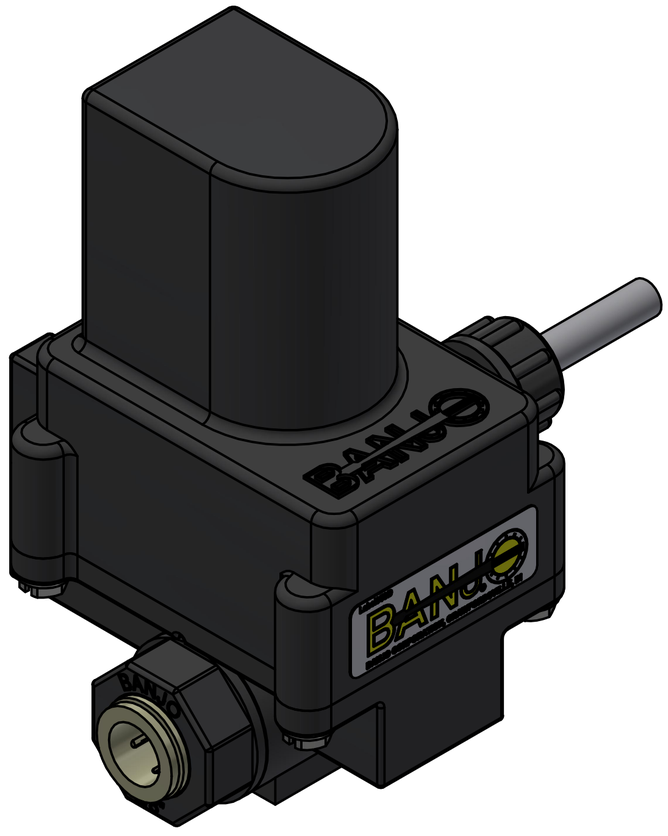

NOTE:

WIRING, 3 WIRE

RED = +12 VDC
BLACK = GROUND
WHITE = SIGNAL

BANJO CORPORATION

THIS DRAWING AND ALL INFORMATION CONTAINED THEREON ARE THE EXCLUSIVE PROPERTY OF BANJO CORPORATION.

UNLESS SPECIFICALLY NOTED, THIS DRAWING AND ITEMS SHOWN ON THIS DRAWING ARE SUBJECT TO CHANGE AT ANY TIME.

BANJO CORPORATION
150 BANJO DRIVE, CRAWFORDSVILLE, IN 47933
WEB SITE: WWW.BANJOCORP.COM
E-MAIL: BANJOSALES@IDEXCORP.COM

DESCRIPTION
3/8" PUSH LOCK LEV ON/OFF 3WIR 12VDC

PART NUMBER
LEV038PL