KF Series

FEATURES

- A "New Generation" Pump
- Triplex Plunger Pump, available in 4 flows
- Patent-pending, symmetrical power end design featuring top and bottom mounting holes allowing for easy left to right shaft conversion
- Low-high pressure packing design with integrated cooling system
- High volumetric efficiency suction/delivery valves featuring new spherical design of sealing areas
- Splash lubrication
- SAE-C hydraulic drive bell housing and flexible couplers available
- Available with external gear box (direct drive only)

MATERIALS

- High resistance light alloy die cast aluminum crankcase
- 420 Stainless steel manifold, nickel treated
- Taper roller bearings
- Special antifriction, forged, light alloy connecting rods
- Forged alloy steel crankshaft, hardened, tempered and nitrited
- Cast iron piston guide, nickel treated
- Solid ceramic plungers
- Stainless steel valves
- Pumps are also available with 316 SS packing components. These models use prefix "KFN"

Product Group: V

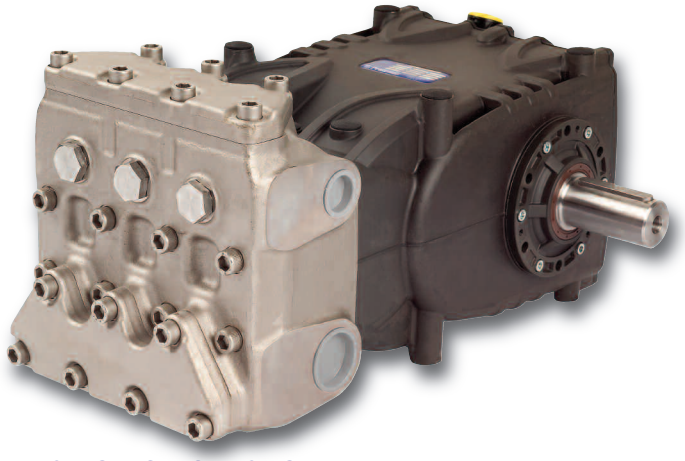

COMMON SPECIFICATIONS

- Maximum Inlet Pressure: . . . . . 45 PSI
- Maximum Fluid Temperature: . . . . . *140° F
- Inlet Port Thread: . . . . . 1-1/2" NPT-F
- Discharge Port Thread: . . . . . 1" NPT-F
- Shaft Diameter: . . . . . 1.575"/40 mm
- Stroke: . . . . . 1.969"/50 mm
- Pump Dimensions: . . . . . 20.7" x 14.5" x 9.9"
- Crankcase Oil Capacity: . . . . . 128.5 oz. (3.8 liters) . . . . . (use GP Series 220 Oil)
- Shipping Weight: . . . . . 150 lbs./68 kg

***Please consult technical guide or GP Sales Representative for Temperature/Inlet Pressure Information.**

Note: All models come standard with crankshaft on right side (when facing manifold), specify "L" after part numberwhen ordering left hand version.

MODEL	GPM/LPM	PSI/BAR	RPM	BORE	HP
KF28A	24.5 GPM/93 LPM	3045 PSI/210 BAR	1000 RPM	1.102 in./28 mm	50.0
KF30A	28.0 GPM/106 LPM	2890 PSI/200 BAR	1000 RPM	1.181 in./30 mm	55.0
KF36A	32.2 GPM/122 LPM	2300 PSI/160 BAR	800 RPM	1.417 in./36 mm	50.0
KF36A	36.2 GPM/137 LPM	2050 PSI/140 BAR	900 RPM	1.417 in./36 mm	50.0
KF36A	40 GPM/153 LPM	1900 PSI/130 BAR	1000 RPM	1.417 in./36 mm	52.0
KF40A	45 GPM/170 LPM	1600 PSI/110 BAR	900 RPM	1.574 in./40 mm	49.0

Above pumps also available with crankshaft on left side. To order, add an "L" to the end of the model number.

PUMP OPTIONS

- "F" version features flushing option
- "G" version suitable for pumping high-temperature glycols (up to 140° F)
- "N" version available with 316 Stainless Steel packing components, maximum water temperature 185°F
- Available with external gear box (direct drive only)
- SAE-J 744-C hydraulic drive bell housing and flexible couplers available

General Pump is a member of The Interpump Group

GENERAL PUMP

ACCESSORIES

REGULATORS

R1

18.5-29.0 GPM
2900-8700 PSI



R1X

18.5-29.0 GPM
2900-8700 PSI
316 SS



R2

61.0 GPM
3050 PSI



SAFETY DEVICES

SV2

50.0 GPM
1450-8700PSI



SX2

50.0 GPM
1450-5899 PSI



UNLOADERS

RA2

61.0 GPM
3050 PSI



ZKBH3030

29.0 GPM
3050 PSI



PNRA2

61.0 GPM
3050 PSI



GUNS / LANCES

ZP87SSL19/39/19S/39S

15.85 GPM
8700 PSI



YG7221/L31-YG7221/51

21.0 GPM
7250 PSI



YRL56L

8.0 GPM
5650 PSI



PULSATION DAMPENERS

A7

43.0 GPM
3050 PSI



MISCELLANEOUS

320001/ 320003

3000/5000 PSI
Pressure
Gauge



ZRMAX

1.4-13.9 GPM
11000/22000 PSI
Rotating Nozzle



Y7K

7000 PSI
Rotating
Nozzle



639273

55.0 GPM
50/297
Mesh/Micron
Filter



190448

Oil Drain Kit

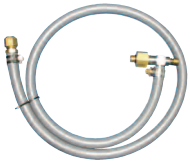

KF series

Technical Details

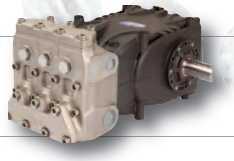

DRIVE OPTIONS

SAE-C hydraulic bell housing and flexible coupler.

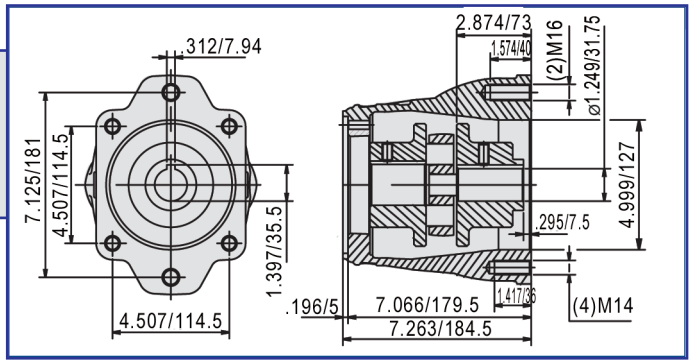

Gearbox

KF pumps can be supplied with an optional gearbox available in 3 different ratios. The gearbox can be mounted on the left or right side of the pump in 4 different angles, at your choice. Gearbox ratios: R=1.125:1, R=1.50:1, R=1.83:1

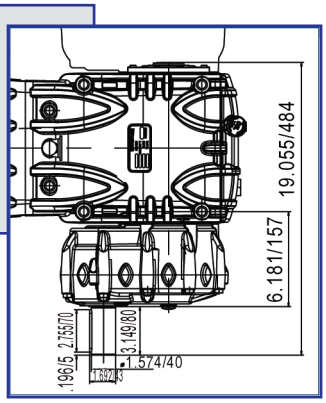

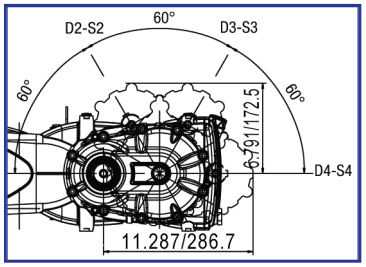

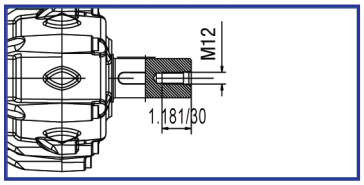

OVERALL DIMENSIONS

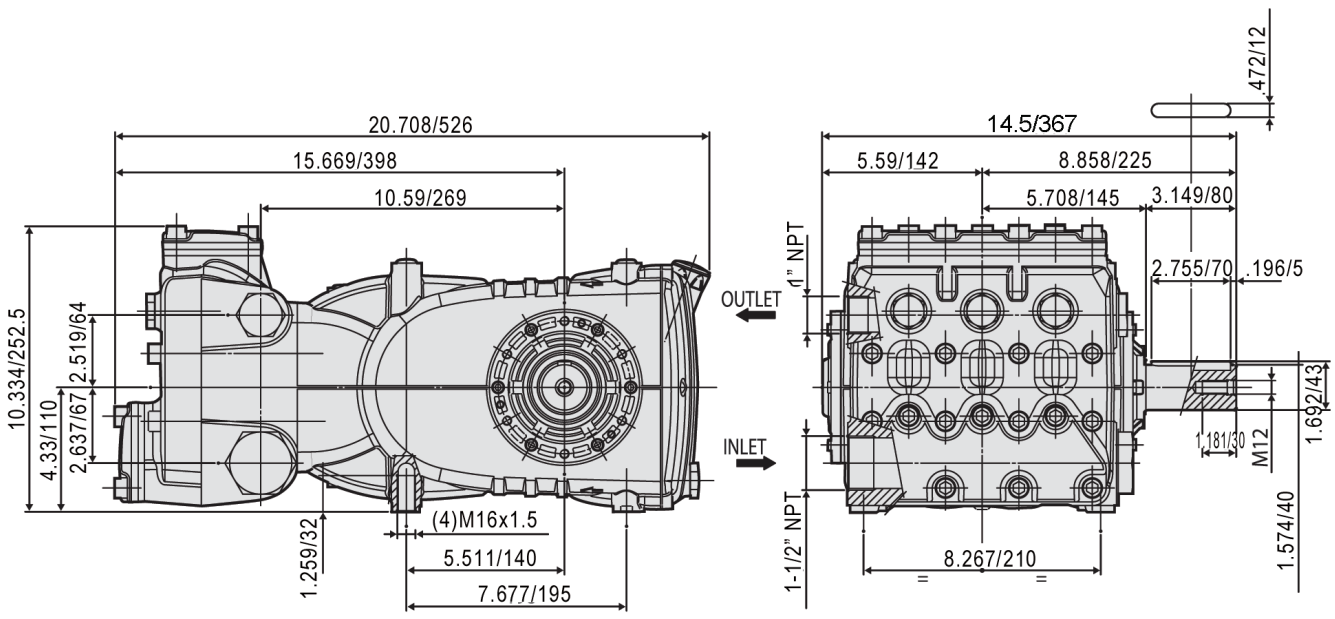

Ref 300850 Rev A
08-11

GENERAL PUMP 1174 Northland Drive • Mendota Heights, MN 55120
Phone: 651.686.2199 • Fax: 800.535.1745 • e-mail: sales@gpcompanies.com • www.generalpump.com

GENERAL PUMP