ANNOVI REVERBERI
The Power of Experience

K-ECO 1510

Version:
Serial number:
Code: **26410**

17/03/2017

230 V - 50 Hz | **schuko**

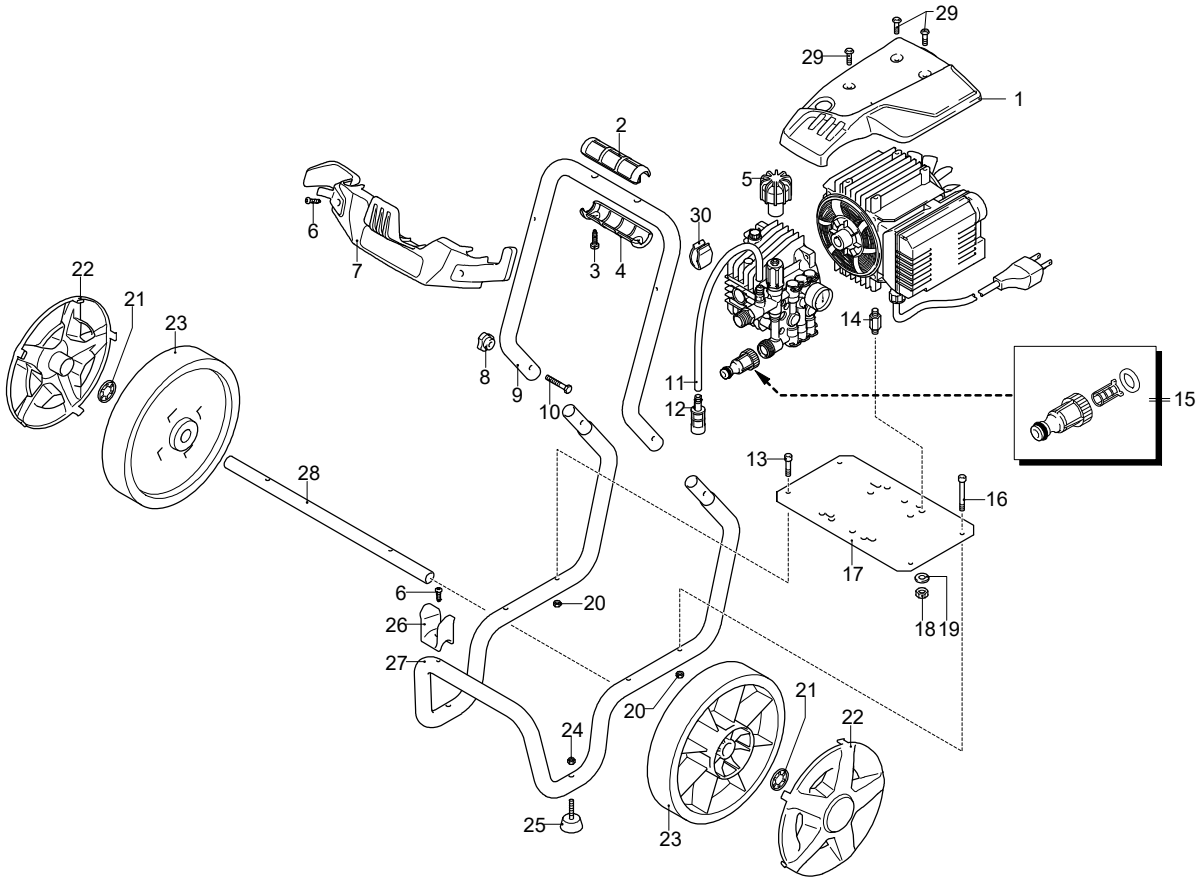

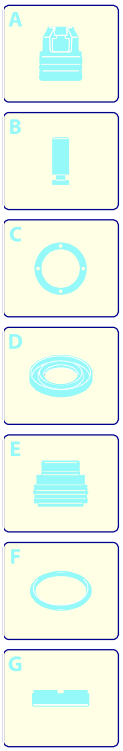

Validity	Pos.	Code	Description	Q
	1	3600281	Casing	1
	2	3580180	Knob	1
	3	2100300	Screw	2
	4	3580090	Knob	1
	5	2360760	Knob	1
	6	2060200	Screw	3
	7	4320050	Accessories carrier	1
	8	50019	Knob	2
	9	4320020	Frame	1
	10	50037	Screw	1
	11	1341030	Filter	1
	12	2180370	Detergent hose	1
	13	1345180	Screw	2
	14	4320230	Stud bolt	4
	15	3082130	Water coupling kit	1
	16	2480310	Screw	2
	17	4320030	Plate	1
	18	390440	Nut	4
	19	380241	Washer	4
	20	2480320	Nut	4
	21	380620	Washer	2
	22	4320270	Guard	2
	23	4320280	Wheel	2
	24	3000170	Nut	2
	25	4320220	Vibration damper	2
	26	3600070	Accessories carrier	1
	27	4320010	Frame	1
	28	4320040	Pipe	1
	29	3600330	Screw	4
	30	4240550	Cable retainer	1

UN_CE_1954-CP

ANNOVI REVERBERI
The Power of Experience

K-ECO 1510

Version:
Serial number:
Code: **26410**

17/03/2017

230 V - 50 Hz | **schuko**

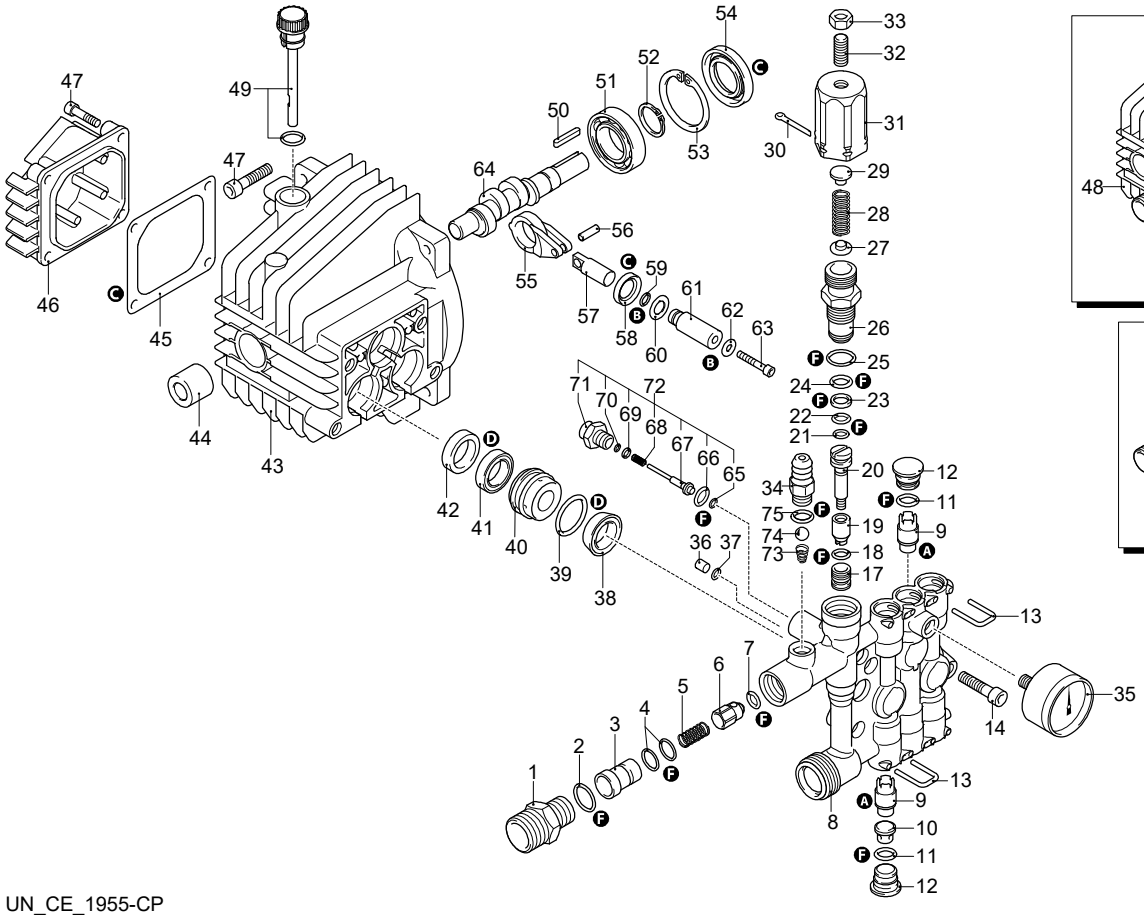

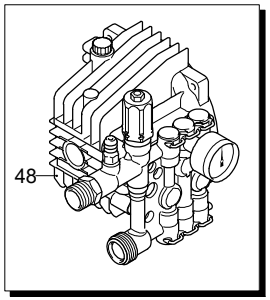

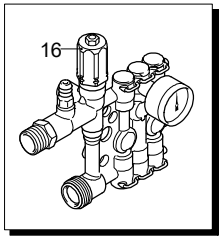

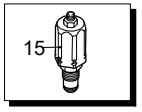

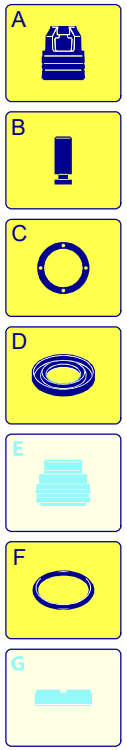

UN_CE_1955-CP

Validity	Pos.	Code	Description	Q
	1	2900120	Fitting	1
	2	740290	O-ring	1
	3	2901060	Injector	1
	4	800560	O-ring	2
	5	1080091	Spring	1
	6	2901070	Shutter	1
	7	1460430	O-ring	1
	8	1344850	Head	1
	9	1349055	Valve	6
	10	1344770	Spacer	3
	11	1465720	O-ring	6
	12	1344800	Plug	6
	13	1344790	Fork	6
	14	850850	Screw	4
	15	42579	Valve kit adjustment	1
	16	1349129	Pump assembly	1
	17	1342701	Seat	1
	18	600180	O-ring	1
	19	1460151	Piston	1
	20	2021900	Piston	1
	21	1080190	O-ring	1
	22	600180	O-ring	1
	23	1080401	Ring	1
	24	820510	O-ring	1
	25	740290	O-ring	1
	26	1344870	Piston guide	1
	27	1343450	Wobble plate	1
	28	1460190	Spring	1
	29	1980220	Wobble plate	1
	30	2500550	Split pin	1
	31	1344881	Insert	1
	32	1980740	Plug	1
	33	1060120	Nut	1
	34	1982520	Hose tail	1
	35	40476	Pressure gauge	1
	36	1344890	Plug	1
	37	2560870	O-ring	1
	38	2460180	O-ring	3
	39	770260	O-ring	3
	40	1344750	Piston guide	3
	41	1260440	Water seal	3
	42	1344760	Ring	3
	43	1344050	Pump body	1
	44	1260050	Bushing	1
	45	1040710	O-ring	1
	46	1344060	Cover	1
	47	1260780	Screw	8
	48	1349528	Pump assembly	1
	49	1349000	Plug	1
	50	880111	Key	1
	51	1341070	Bearing	1
	52	480890	Ring	1
	53	111120	Ring	1
	54	1341080	Ring	1
	55	1340060	Connecting-rod	3
	56	1340080	Pin	3
	57	1340070	Piston	3
	58	1260460	Oil seal	3
	59	600180	O-ring	3
	60	1341010	Plate	3
	61	1342740	Piston	3
	62	1341020	Washer	3

ANNOVI REVERBERI
The Power of Experience

K-ECO 1510

Version:

Serial number:

Code: **26410**

17/03/2017

230 V - 50 Hz | **schuko**

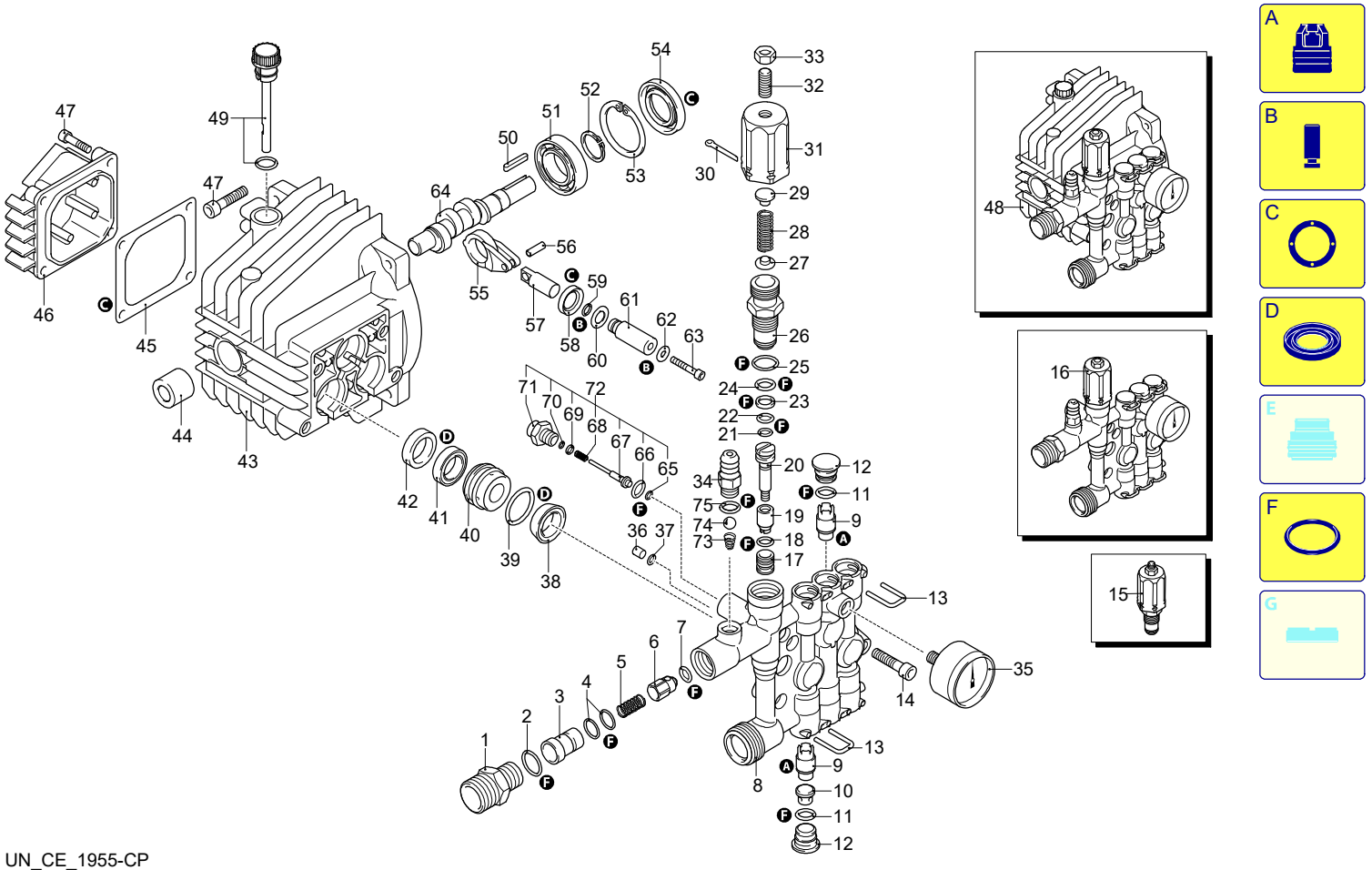

UN_CE_1955-CP

Validity	Pos.	Code	Description	Q
	63	850670	Screw	3
	64	1344190	Shaft	1
	65	1120680	O-ring	1
	66	600180	O-ring	1
	67	2022040	Pin	1
	68	2021630	Spring	1
	69	2021650	Washer	1
	70	1260820	O-ring	1
	71	1344830	Fitting	1
	72	42580	TSS Retrofit kit	1
	73	1560520	Spring	1
	74	1250280	Ball	1
	75	480480	O-ring	1
	A	42566	Valve kit	1
	B	2623	Piston kit	1
	C	1876	Oil seal kit	1
	D	42567	Water seal kit	1
	F	42568	Gasket kit	1

ANNOVI REVERBERI
The Power of Experience

K-ECO 1510

Version:
Serial number:
Code: **26410**

17/03/2017

230 V - 50 Hz | **schuko**

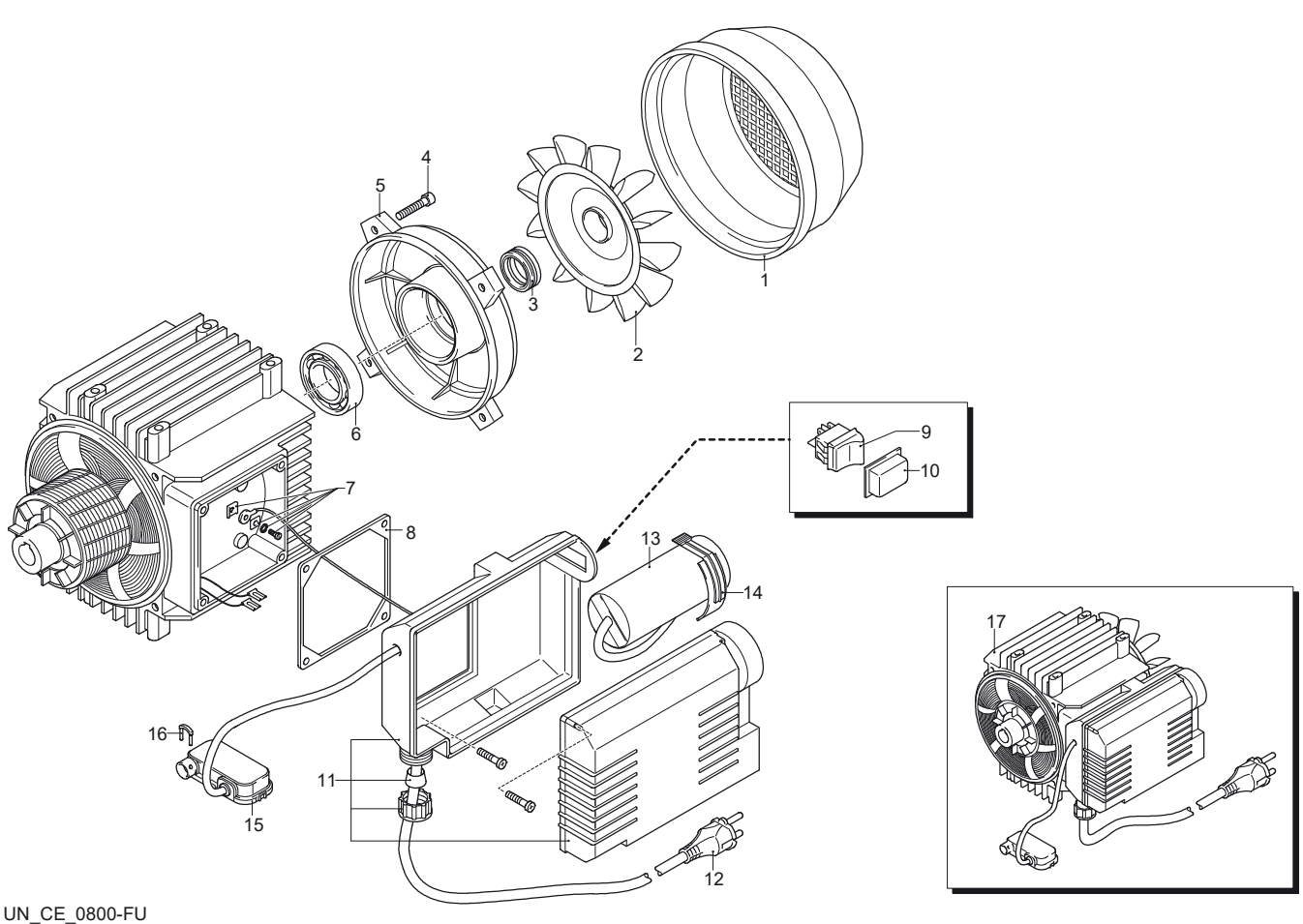

UN_CE_0800-FU

Validity	Pos.	Code	Description	Q
	1	1342040	Fan cowling	1
	2	1260300	Fan	1
	3	1340350	Seal	1
	4	1260760	Screw	1
	5	1340320	Shield	1
	6	1340340	Bearing	1
	7	1269100	Clamp	1
	8	1340780	Gasket	1
	9	1682270	Switch	1
	10	2102600	Guard	1
	11	1342261	Box	1
	12	1760450	Cable	1
	13	1263520	Capacitor	1
	14	1342080	Clamp	1
	15	2029752	TSS box assembly	1
	16	2022201	Fork	1
	17	44480	Motor	1

ANNOVI REVERBERI
The Power of Experience

K-ECO 1510

Version:
Serial number:
Code: **26410**

17/03/2017

230 V - 50 Hz | **schuko**

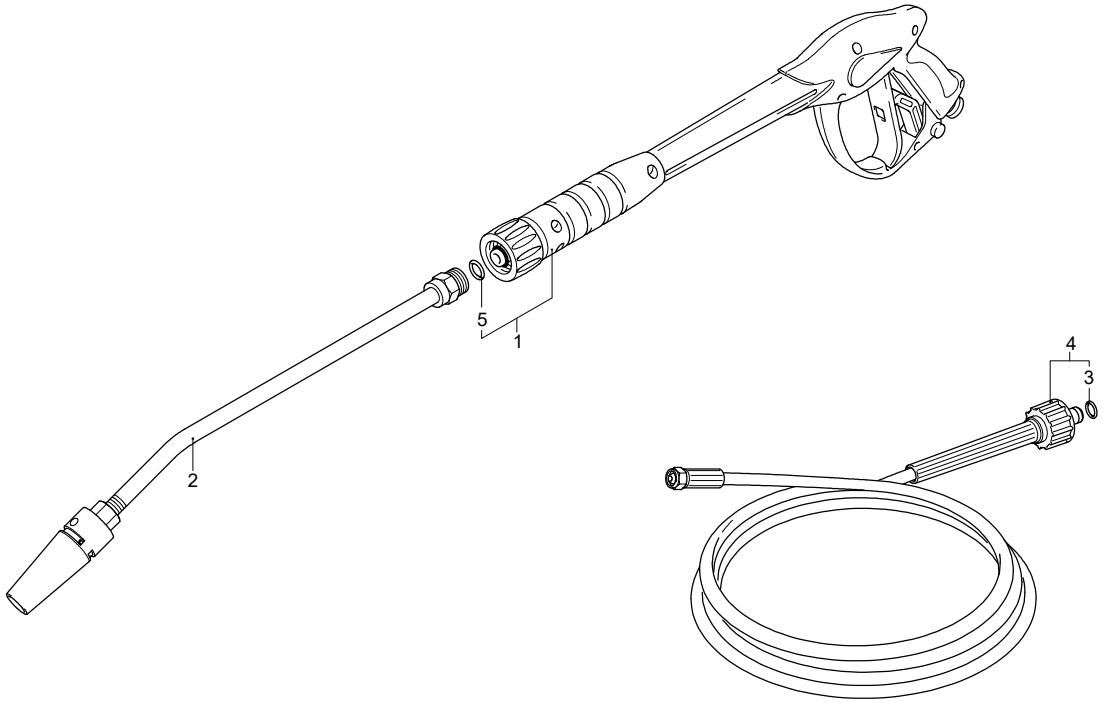

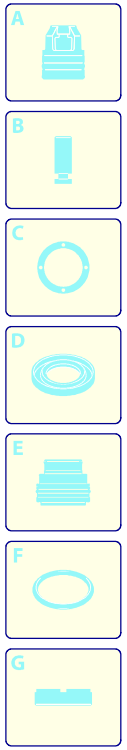

Validity	Pos.	Code	Description	Q
	1	40925	Gun	1
	2	41269	Lance	1
	3	2000770	O-ring	1
	4	3780441	High pressure hose	1
	5	391000	O-ring	1

UN_CE_0905-AT