ANNOVI REVERBERI
The Power of Experience

K-ECO 1508

Version:
Serial number:
Code: **26409**

11/05/2017

230 V - 50 Hz | **schuko**

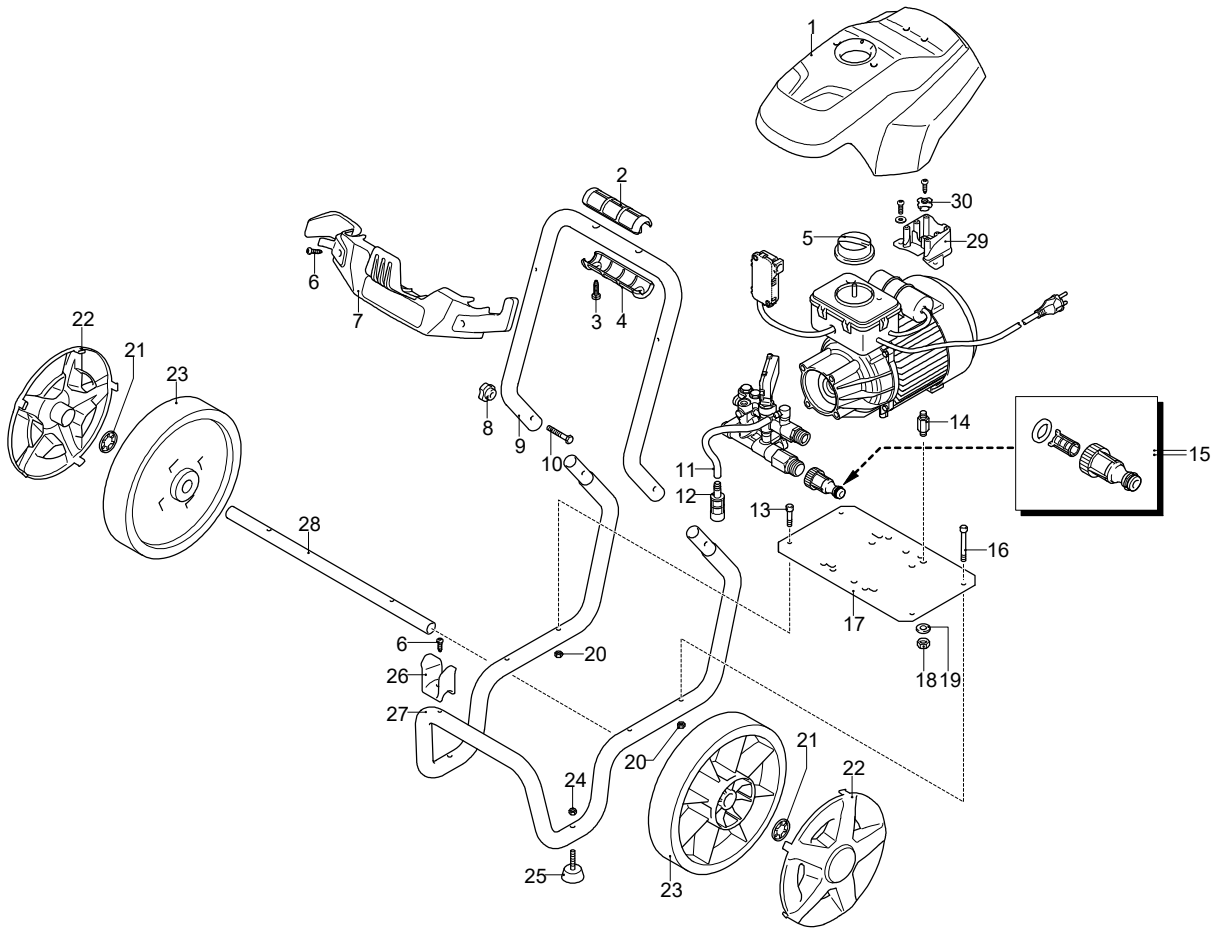

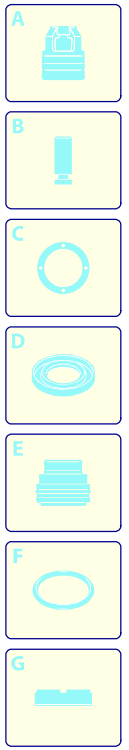

Validity	Pos.	Code	Description	Q
	1	4320081	Casing	1
	2	3580180	Knob	1
	3	2100300	Screw	2
	4	3580090	Knob	1
	5	3780072	Knob	1
	6	2060200	Screw	3
	7	4320050	Accessories carrier	1
	8	50019	Knob	2
	9	4320020	Frame	1
	10	50037	Screw	1
	11	1341030	Filter	1
	12	2180370	Detergent hose	1
	13	1345180	Screw	2
	14	1462400	Stud bolt	4
	15	3082130	Water coupling kit	1
	16	2480310	Screw	2
	17	4320030	Plate	1
	18	480640	Nut	4
	19	1680960	Washer	4
	20	2480320	Nut	4
	21	380620	Washer	2
	22	4320270	Guard	2
	23	4320280	Wheel	2
	24	3000170	Nut	2
	25	4320220	Vibration damper	2
	26	3600070	Accessories carrier	1
	27	4320010	Frame	1
	28	4320040	Pipe	1
	29	4320110	Support	1
	30	2600100	Cable gland	1

UN_CE_1504-GR

ANNOVI REVERBERI
The Power of Experience

K-ECO 1508

Version:
Serial number:
Code: **26409**

11/05/2017

230 V - 50 Hz | **schuko**

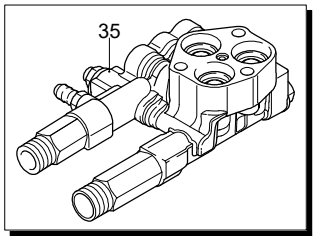

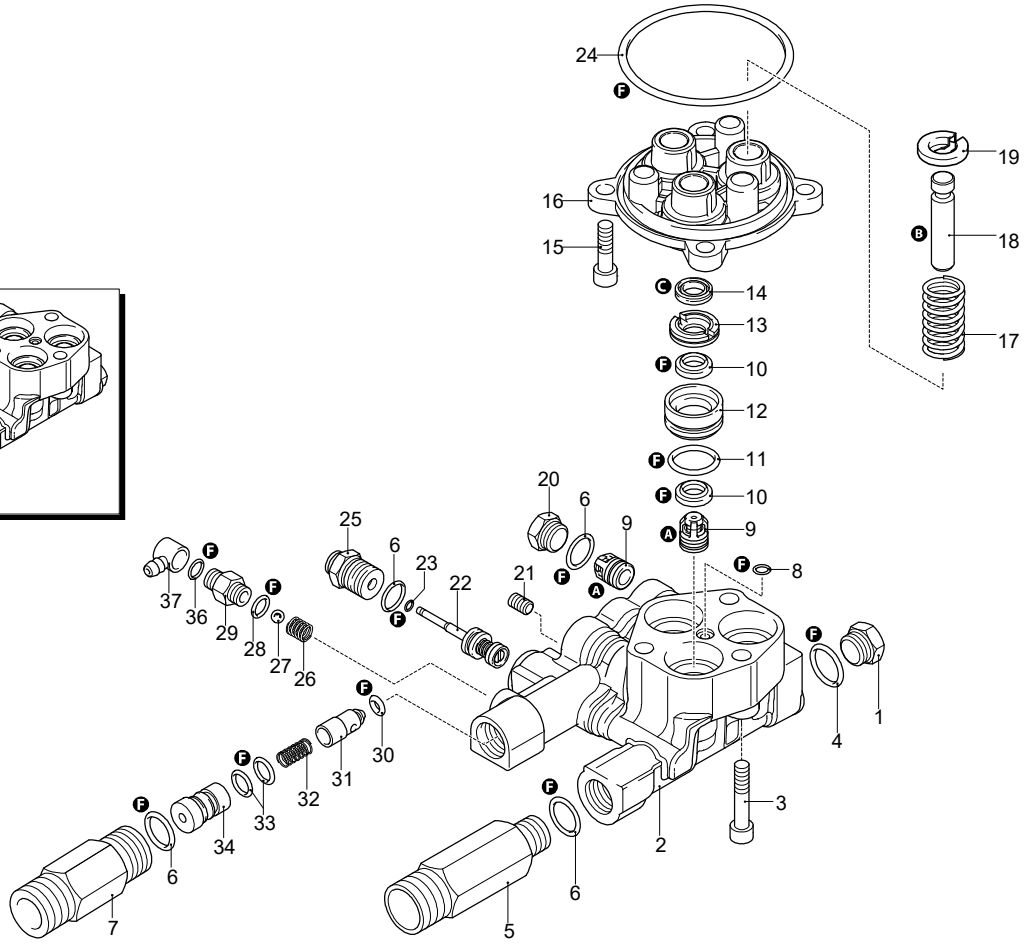

A
B
C
D
E
F
G

UN_CE_1640-DQ

Validity	Pos.	Code	Description	Q
	1	880581	Plug	1
	2	2900430	Head	1
	3	800220	Screw	3
	4	820510	O-ring	1
	5	2900100	Fitting	1
	6	740290	O-ring	6
	7	2840400	Fitting	1
	8	480480	O-ring	1
	9	2849051	Complete valve	6
	10	2200141	Water seal	6
	11	770590	O-ring	3
	12	2840550	Bushing	3
	13	2840540	Bushing	3
	14	1683500	Oil seal	3
	15	2900500	Screw	4
	16	2900020	Piston guide	1
	17	2901170	Spring	3
	18	2840530	Piston	3
	19	2840050	Lock	3
	20	2840130	Plug	3
	21	2840470	Screw	1
	22	2909005	Spring assembly	1
	23	1120680	O-ring	1
	24	3040270	O-ring	1
	25	2900130	Fitting	1
	26	1560520	Spring	1
	27	1250280	Ball	1
	28	480480	O-ring	1
	29	1344620	Fitting	1
	30	1460430	O-ring	1
	31	2901070	Shutter	1
	32	3780450	Spring	1
	33	800560	O-ring	2
	34	2901060	Injector	1
	35	2909139	Head assembly	1
	36	480560	O-ring	1
	37	2320180	Hose tail	1
	A	2233	Valve kit	1
	B	2313	Piston kit	1
	C	42124	Oil seal kit	1
	F	42698	Gasket kit	1

ANNOVI REVERBERI
The Power of Experience

K-ECO 1508

Version:
Serial number:
Code: **26409**

11/05/2017

230 V - 50 Hz | **schuko**

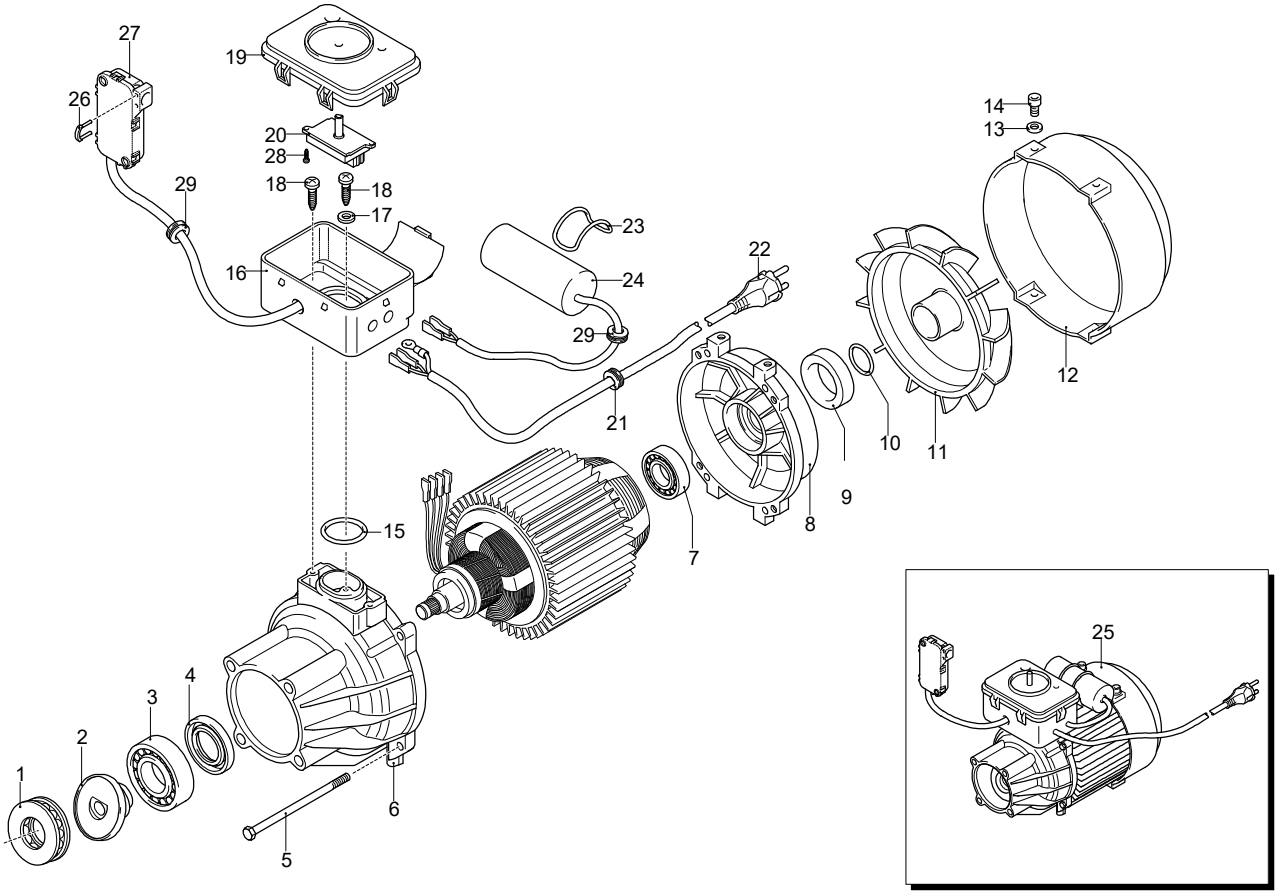

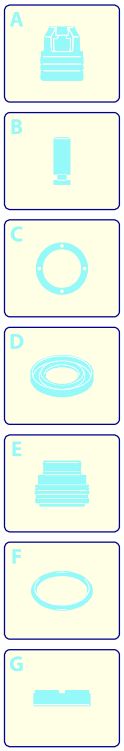

Validity	Pos.	Code	Description	Q
	1	2900170	Bearing	1
	2	2900260	Wobble plate	1
	3	1780490	Bearing	1
	4	1460530	Oil seal	1
	5	2320090	Screw	4
	6	2900010	Pump body	1
	7	1460590	Bearing	1
	8	1460040	Shield	1
	9	1461200	Oil seal	1
	10	394280	O-ring	1
	11	1460370	Fan	1
	12	4240520	Conveyor	1
	13	1680960	Washer	2
	14	1460460	Screw	2
	15	660170	O-ring	1
	16	2320132	Box	1
	17	1262400	Washer	1
	18	2020570	Screw	3
	19	3780321	Cover	1
	20	2900420	Switch	1
	21	2021480	Gland	1
	22	3780630	Cable	1
	23	2320640	O-ring	1
	24	1982590	Capacitor	1
	25	44811	Motor	1
	26	2022201	Fork	1
	27	2029753	TSS box assembly	1
	28	2000210	Screw	2
	29	1462900	Gland	2

UN_CE_1596-MR

ANNOVI REVERBERI
The Power of Experience

K-ECO 1508

Version:
Serial number:
Code: **26409**

11/05/2017

230 V - 50 Hz | **schuko**

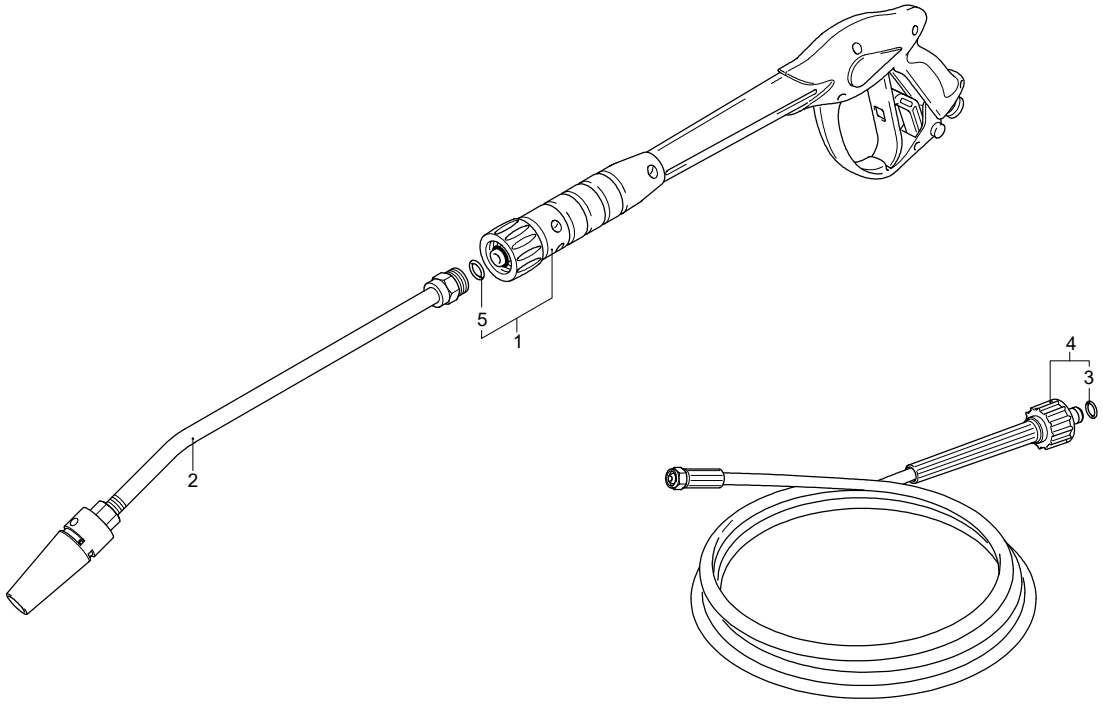

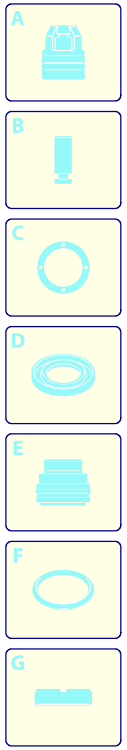

Validity	Pos.	Code	Description	Q
	1	40925	Gun	1
	2	41269	Lance	1
	3	2000770	O-ring	1
	4	3780491	High pressure hose	1
	5	391000	O-ring	1

UN_CE_0905-AT