

SENATOR™ G2 \ SCORPION™ G2

TROLLEY KIT
INSTALLATION INSTRUCTIONS

CONTENTS:

WHEELS	AXLE	HANDLE ASSY	AXLE SPACER	WHEEL LOCK	M8 x 20
X4	X2 665mm		X4	X4	x4

TOOLS REQUIRED:

13mm SPANNER	4mm HEX KEY	WHEEL CHOCK

2 PEOPLE

STEP 1

M8 x 20	13mm SPANNER
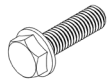 x4	

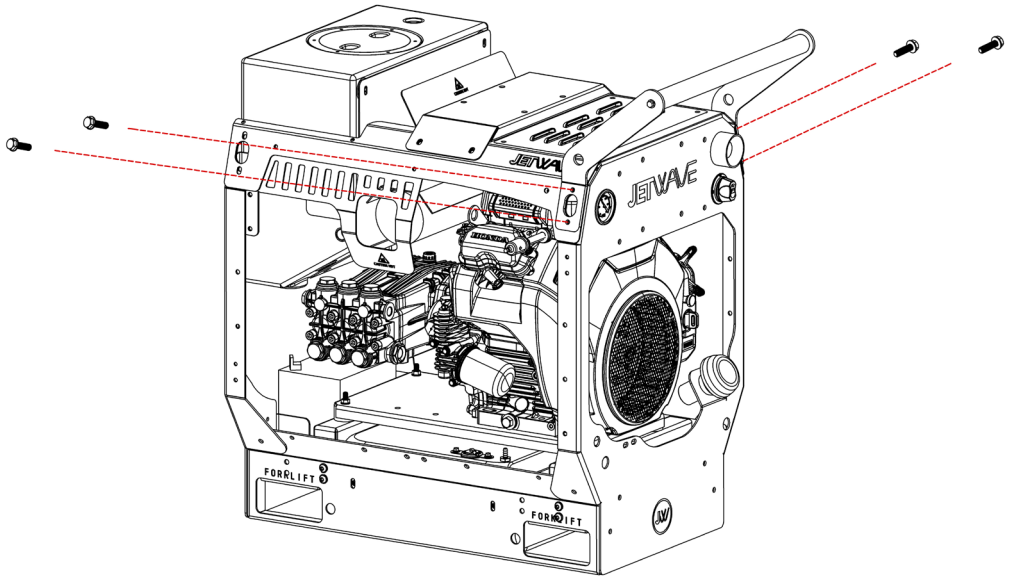

Using the bolts provided, place handle into position and tighten bolts using a **13mm ring spanner**.

STEP 2

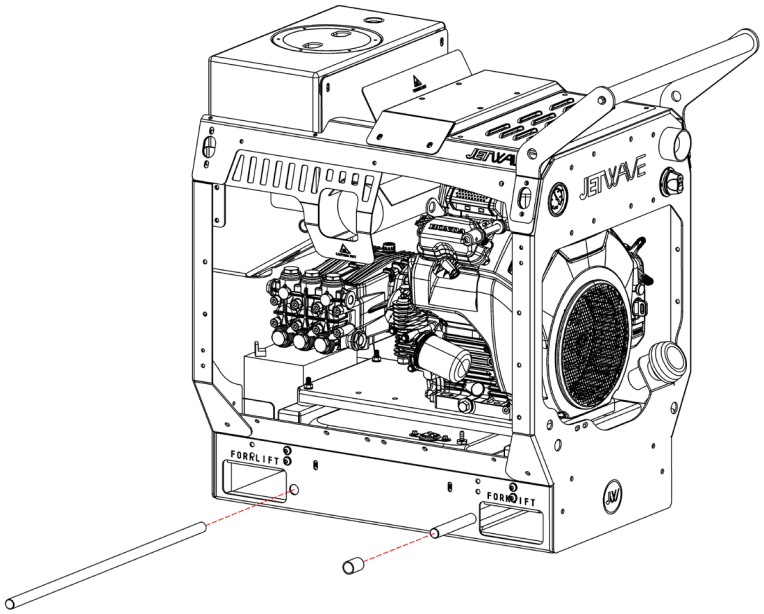

Slide the axles through the holes located in the base of the unit. Then slide on one axle spacer per side.

STEP 3

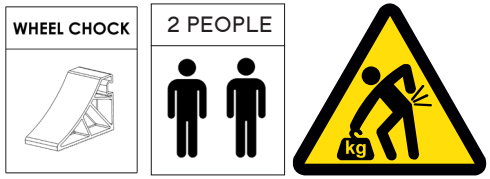

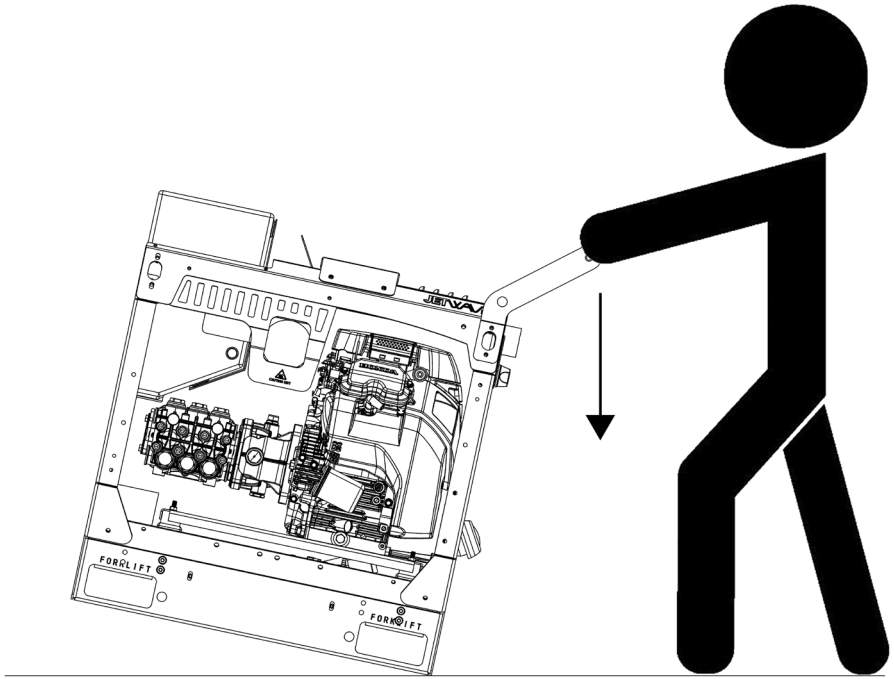

One person will lean back on the handle to raise the front of the machine as shown above, lift carefully and in the proper position as unit is very heavy, the other person will do step 4.

STEP 4



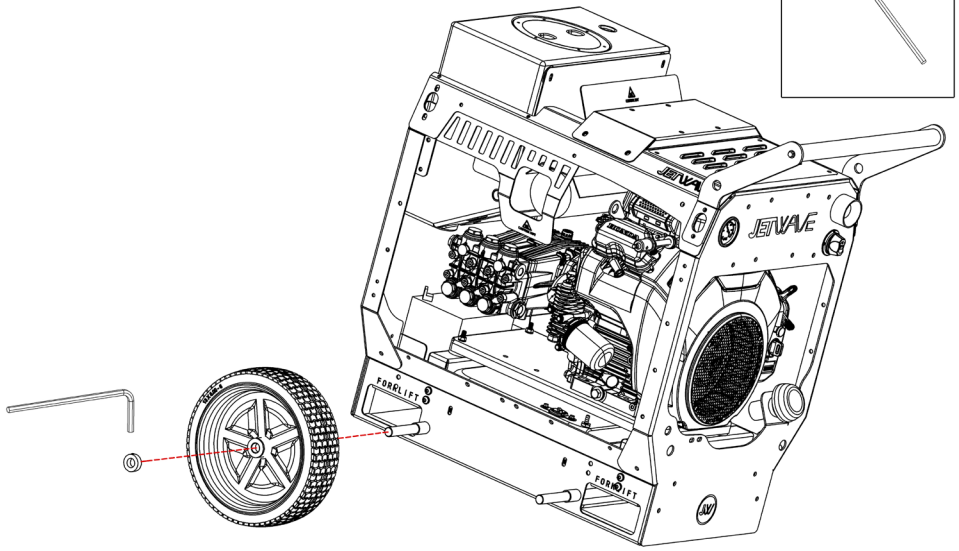

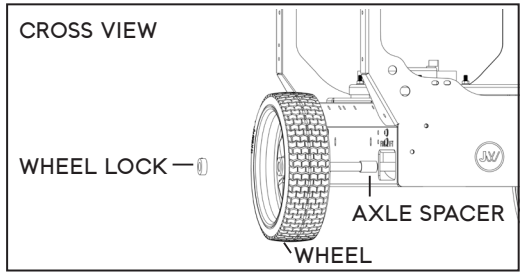

Slide the wheel onto the axle hard up against the axle spacer. Then slide the red wheel locks hard up against the wheel. Make sure the excess axle material is even on both side of the machine. Then tighten the grub screw using the **4mm hex key.**

STEP 5

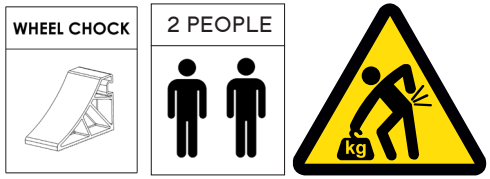

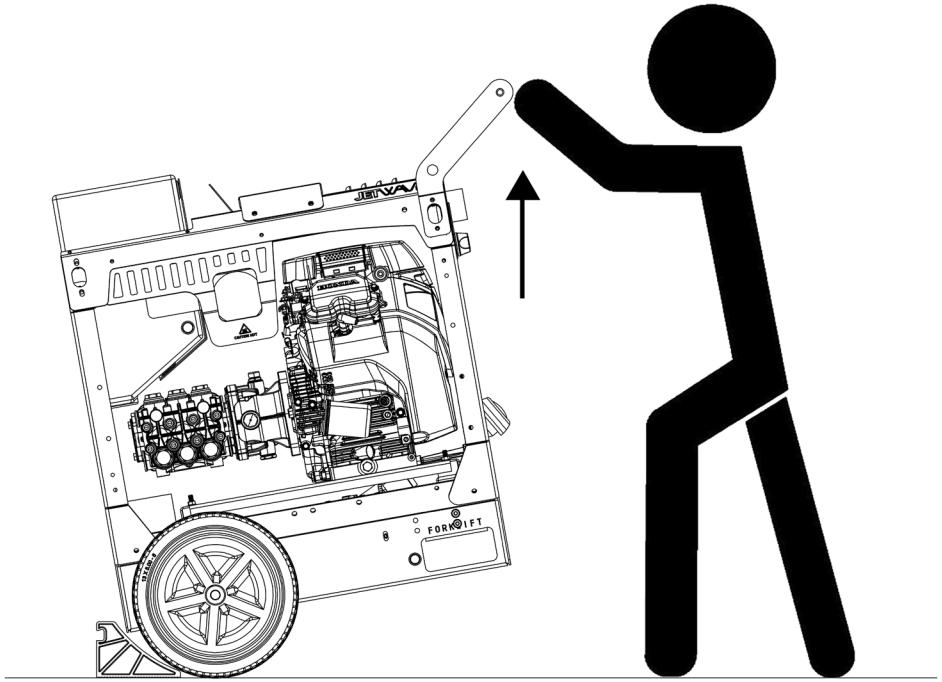

Place the wheel chocks under the two front wheels, then lift the rear of the machine of the ground. (approximately 150mm)

STEP 6

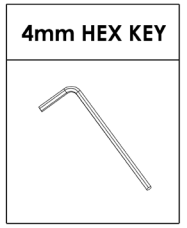

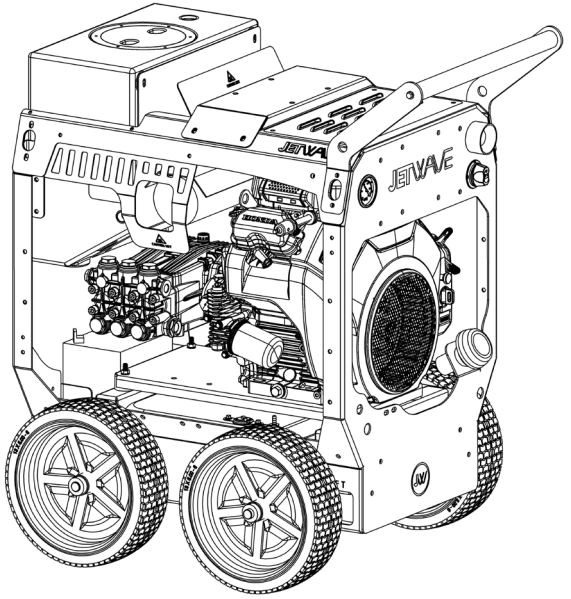

Slide the wheel onto the axle hard up against the axle spacer. Then slide the red wheel locks hard up against the wheel. Make sure the excess axle material es even on both side of the machine. Then tighten the grub screw using the **4mm hex key.**