JETWAVE® HIGH PRESSURE CLEANERS

SENATOR™ G2 280-21

PROFESSIONAL
DAILY USAGE

4060	21	HONDA GX690	GEARBOX	COLD WATER
280 BAR		PETROL	1450RPM	
PSI	L/PM	ENGINE TYPE	DRIVE	OUTPUT
		POWERED by HONDA		



Optional - Trolley Kit

HERO INNOVATIONS

PEXO™
Stainless Steel Exoskeleton

JWPP™
Jetwave Italian Premium Pump

CC™
Centralised Control

AVPS™
Anti Vibration Protection System

MC™
Multi Configuration

LEARN MORE

Senator G2 Video

Registered Design ® 202215872

APPLICATIONS

- Tradesmen
- Commercial Cleaners
- Shipping & Logistics
- Construction



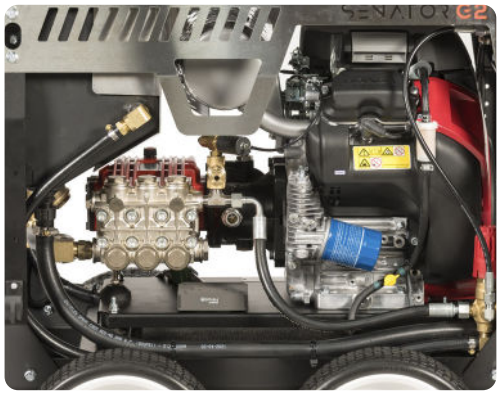

STANDOUT FEATURES

JW® UDOR® Premium Italian plunger pump running at 1450RPM, delivers more performance and longer life.

Electric start industrial **V-Twin Honda™ GX690** series engine with digital engine hour meter.

Jetwave Safety System™ (JSS) safety valve to prevent over pressurisation.

Seamless & sealed **40L on-board oversized water bypass tank** w/low level cut out, for unit water supply and pump protection in bypass.

Battery isolator & emergency stop for increased safety and longevity.

Seamless under chassis mounted 25L fuel tank (w/level gauge) protected from heat with front fill point safety.

STANDARD EQUIPMENT



Gun: J5500k low trigger force gun w/swivel & lance coupling system.

Lance: JW Straight stainless steel lance w/ snap coupling + nozzle w/protector & tail



Hose: 15m non marking double wire braid hose w/M22 couplings



Chemical: JW easy foam kit w/1L bottle



G2 WASHBOX VIDEO

DIMENSIONS (MM)

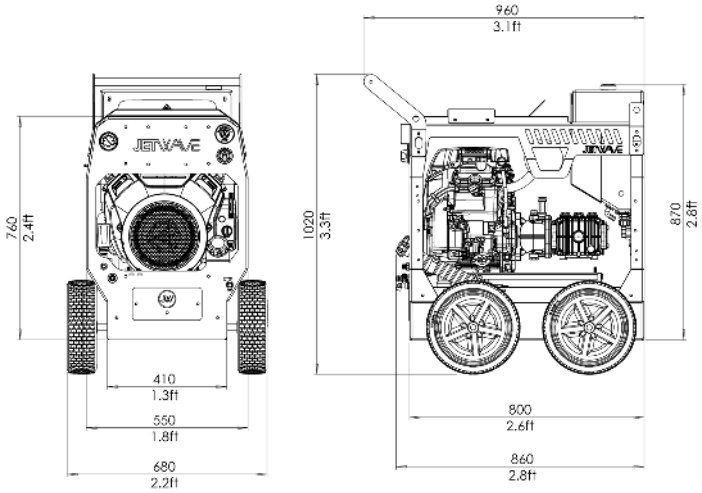

TECHNICAL DATA 0:00

SENATOR G2 280-21

Product Code	CW4000-21PEG2
Pressure / Flow Rate	**4060 PSI** (280 BAR) / **21 L/PM** (1,260 L/PH) / **5.5 GPM**
Max Water Inlet Temp	60°C / 140°F
Class (AS/NZS: 4223)	B (5,880 Bar/Litres)
Usage Frequency	Professional: Daily Usage
Nozzle Size	05
Frame Structure	CNC Modular galvanised steel chassis plus satin powder coat finish and **stainless steel cover**

MOTOR FEATURES

Engine / Power	**Honda™ GX690** Electric Start (air cooled) 23HP / 690cc
Fuel Type / Capacity / Protection	**Unleaded** / 25L (w/level gauge) / Low Oil Shutdown

HYDRAULIC FEATURES

Pump / Head / Pistons	**JW® UDOR® Premium** Triplex Plunger / Brass (Nickle Plated) / Ceramic
Motor Pump Coupling / Pump RPM	**Gearbox Drive / 1450RPM**
Unloader Valve	Independent (Panel Mounted)
Safety Valve	Yes

DIMENSIONS & WEIGHT

Machine Dimensions / Weight	Skid: 860mm(L) x 550mm(W) x 870mm(H) / 150KG (approx.)

WARRANTY(S)

Unit / Pump Warranty*	2 Years
Engine Warranty*	3 Years

OPTIONAL ACCESSORIES

30m Hose Reel w/30m total hose	1060CMPL-SEN30M
60m Hose Reel w/60m total hose	1067CMPL-SEN60M
JW Pro Turbo Head	JWA303-05
21" Hammerhead - Stainless Steel	JWA-FSC22-5.05
30" Hammerhead - Stainless Steel	JWA-FSC30.06

OPTIONAL UPGRADES

4 Wheel Trolley Kit	JWA407-S
Hose Reel Roller Guide System HGS™	1067-GUIDEASSY (1067 Only)

Copyright © 2023 Jetwave® Group Pty Ltd. All Rights Reserved.

The manufacturer reserves the right to modify design features and technical facts without notice; due to our principals of continuous improvement.
*Coverage against defects in material and workmanship (refer to Jetwave's and component partners T&Cs).

V3.0 08/23

JETWAVE GROUP

10-16 Smith Street, Thebarton, 5031, South Australia, AU +61 8 8371 3599 sales@jetwave.com.au jetwavegroup.com