ENGLISH VERSION

WARNING!

Read this Operator's Manual carefully before using this machine. Failure to understand and follow the contents of this manual may result in electrical shock, fire and/or serious personal injury.

READ CAREFULLY

JETWAVE®

WATER JETTING SYSTEMS

SCORPION™ G2

WATER JETTING/DRAIN CLEANING MACHINE

Petrol Driven

Record Serial Number below and retain product serial number which is located on nameplate.	
UNIT SERIAL NO.	
ENGINE SERIAL NO.	
PURCHASE DATE	



V6.0 - 2026

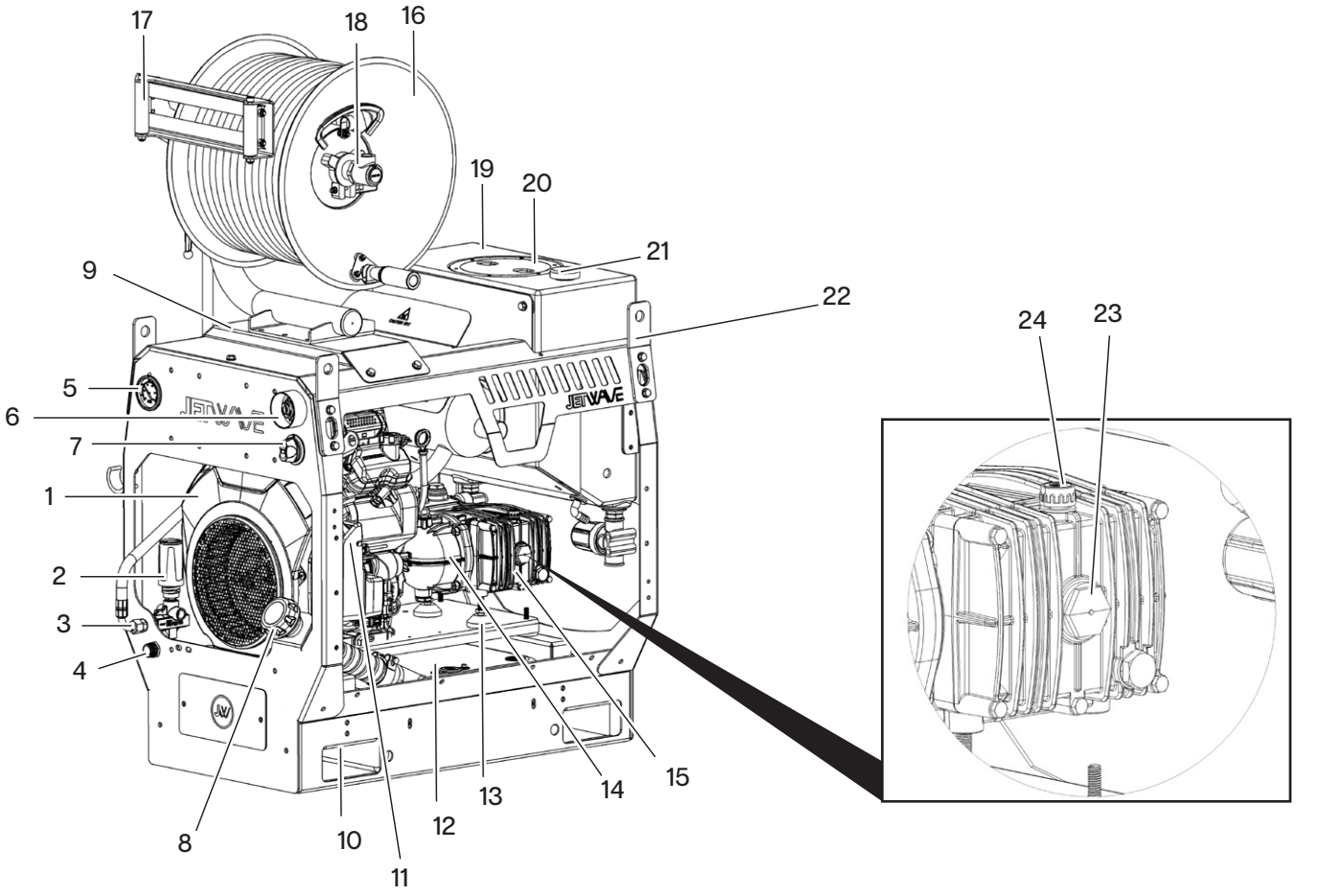
17
18
16
19
20
21
9
22
24
23
5
6
7
1
2
3
4
8
10
11
12
13
14
15

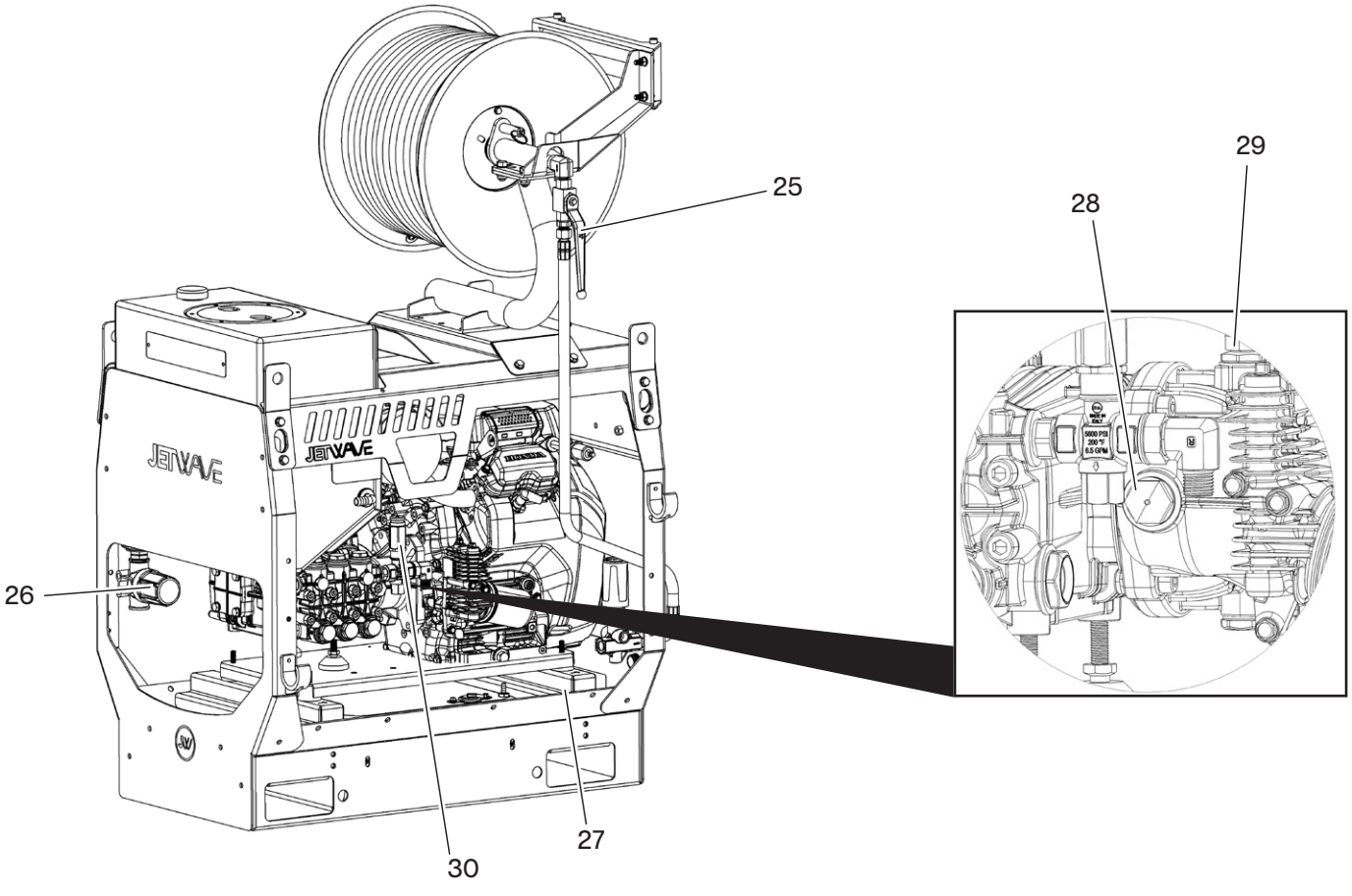
25
29
28
26
27
30

Scorpion G2 (Honda)

1. Honda Engine
2. Unloader Valve
3. High Pressure Outlet
4. Low Pressure Inlet (for tap connection)
5. Pressure Gauge
6. Emergency Stop
7. Battery Isolator
8. Fuel Fill Point
9. Hose Reel Mounting Plate
10. Forklift Pockets/Mounting Points
11. Engine Starting System
12. Fuel Tank
13. Anti-Vibration Plate
14. Gearbox
15. Triplex Pump
16. Hose Reel
17. Hose Reel Roller Guide
18. Hose Reel Tension Brake
19. Water Tank
20. Water Tank Lid
21. Water Tank Breather
22. Top Lifting Lugs
23. Pump Oil Site Glass
24. Pump Oil Dipstick
25. Ball Valve
26. Water Inlet Filter
27. Battery
28. Gearbox Oil Site Glass
29. Gearbox Oil Breather
30. Safety Valve

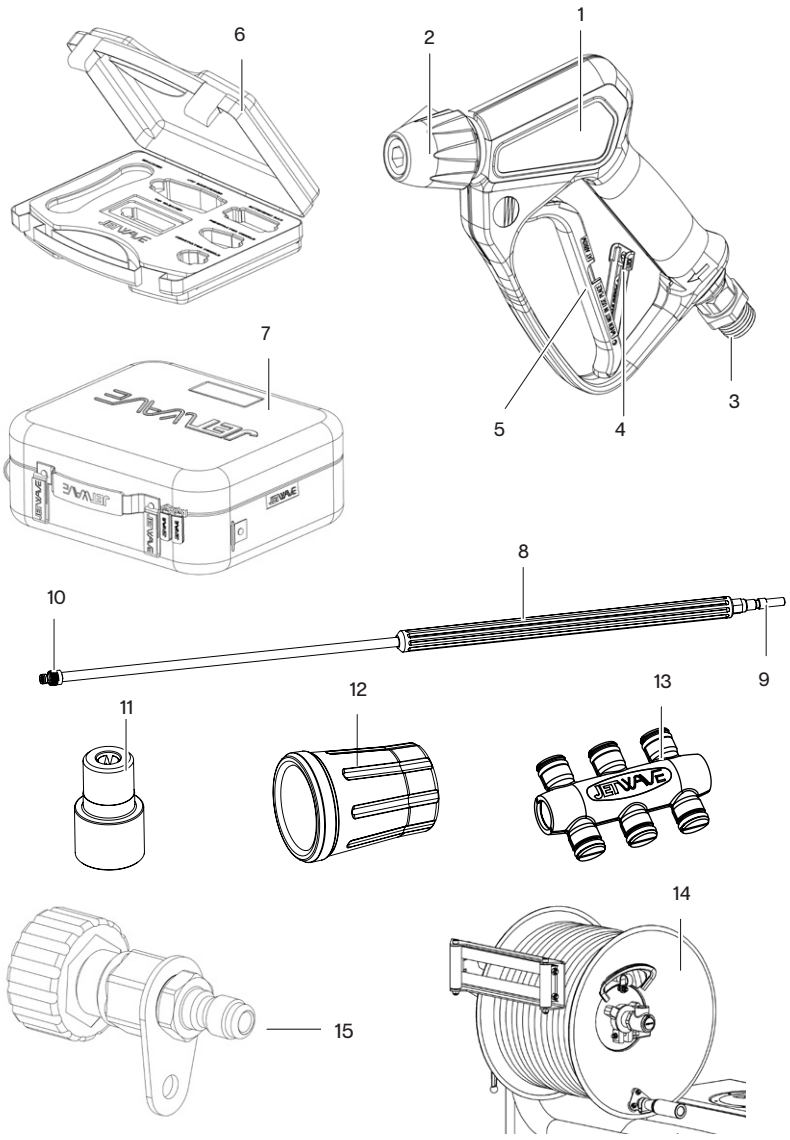

Standard Equipment

1. J5500K High Pressure Spray Gun
2. J5500K Quick Front Lance Coupling
3. High Pressure Hose Connection
4. Gun Lock Out
5. J5500K LTF Spray Gun Trigger
6. Professional Nozzle Kit
7. G2 Washcase
8. JW Lance with insulation
9. Lance Connection J5500K Tail
10. JetBlade nozzle connection
11. JetBlade High Pressure Nozzle
12. JetBlade nozzle protector
13. JetBlade nozzle holder
14. 60m Pro Rapid Style Hose Reel with 60m jetting hose and Hose Reel Roller Guide (HGS™)
15. M22 to HT12 Snap Tail with whip plate

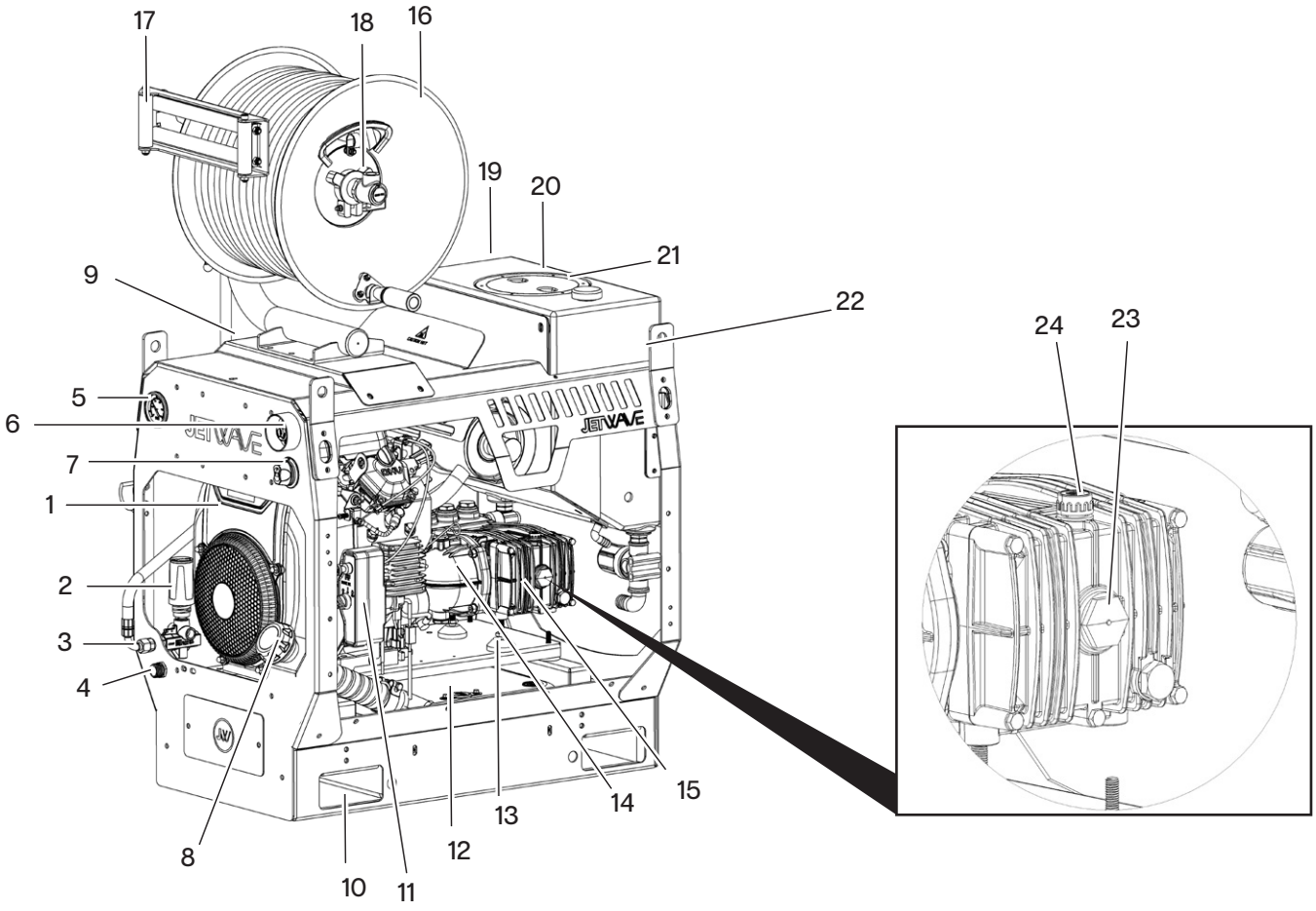
17
18
16
19
20
21
9
22
24
23
5
6
7
1
2
3
4
8
10
11
12
13
14
15

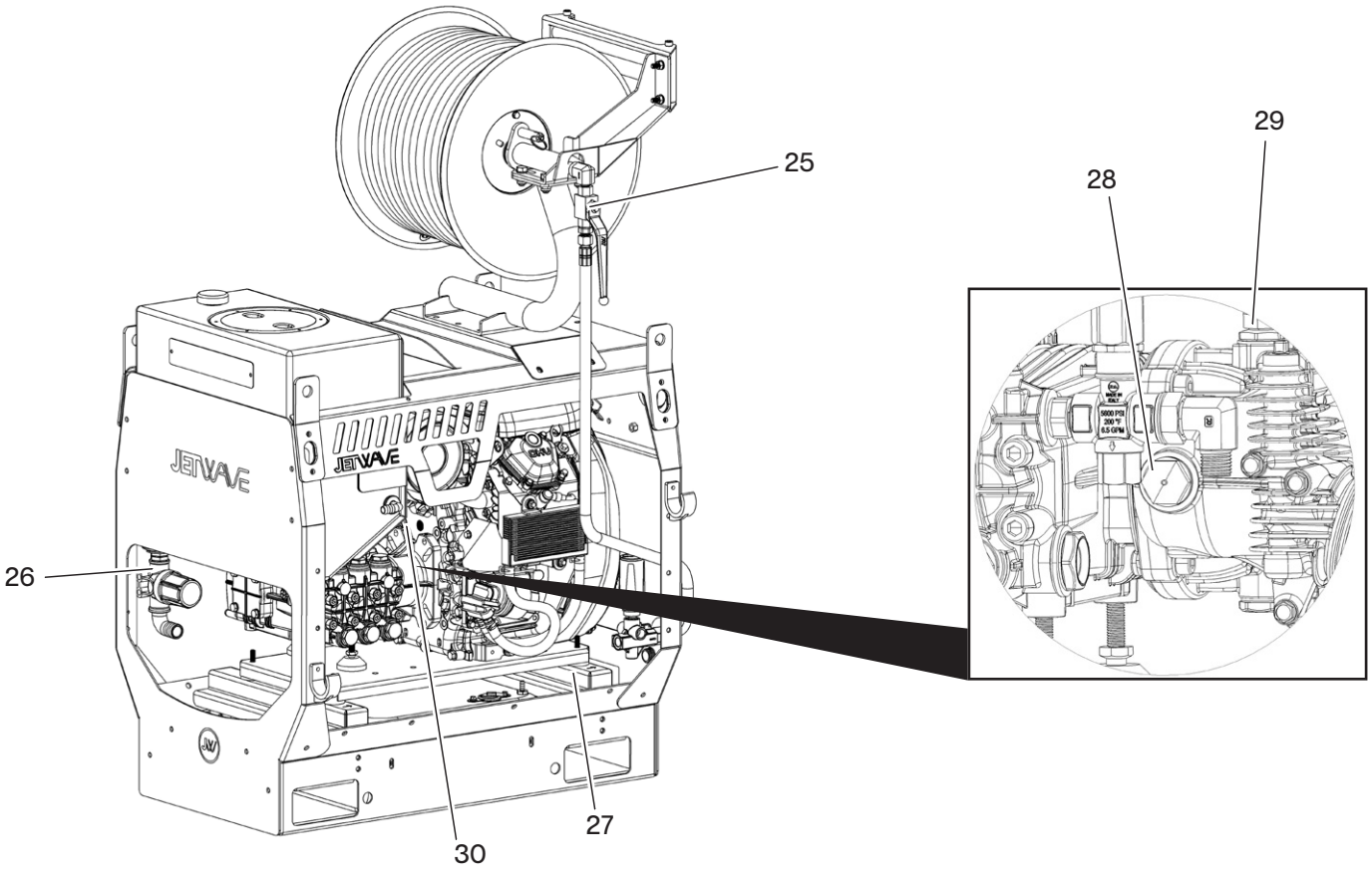
25
29
28
26
27
30

Scorpion G2 (JX750)

1. JX750 Engine
2. Unloader Valve
3. High Pressure Outlet
4. Low Pressure Inlet (for tap connection)
5. Pressure Gauge
6. Emergency Stop
7. Battery Isolator
8. Fuel Fill Point
9. Hose Reel Mounting Plate
10. Forklift Pockets/Mounting Points
11. Engine Starting System
12. Fuel Tank
13. Anti-Vibration Plate
14. Gearbox
15. Triplex Pump
16. Hose Reel
17. Hose Reel Roller Guide
18. Hose Reel Tension Brake
19. Water Tank
20. Water Tank Lid
21. Water Tank Breather
22. Top Lifting Lugs
23. Pump Oil Site Glass
24. Pump Oil Dipstick
25. Ball Valve
26. Water Inlet Filter
27. Battery
28. Gearbox Oil Site Glass
29. Gearbox Oil Breather
30. Safety Valve

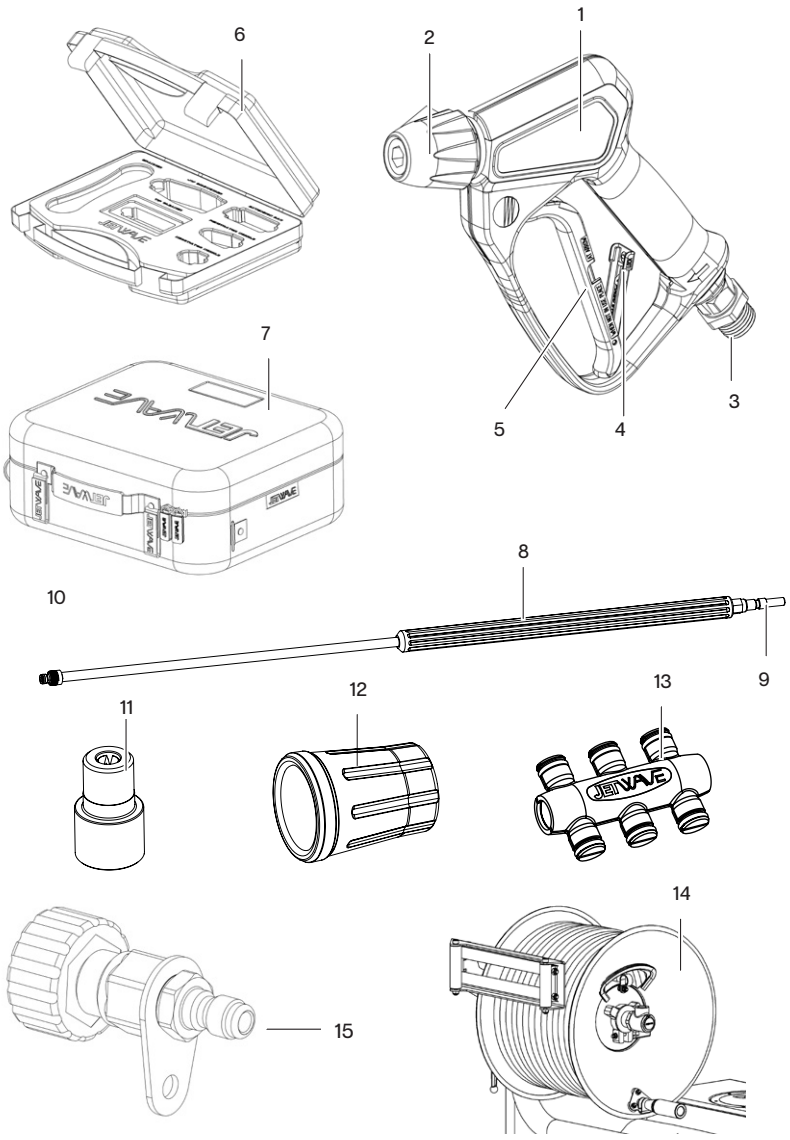

Standard Equipment

1. J5500K High Pressure Spray Gun
2. J5500K Quick Front Lance Coupling
3. High Pressure Hose Connection
4. Gun Lock Out
5. J5500K LTF Spray Gun Trigger
6. Professional Nozzle Kit
7. G2 Washcase
8. JW Lance with insulation
9. Lance Connection J5500K Tail
10. JetBlade nozzle connection
11. JetBlade High Pressure Nozzle
12. JetBlade nozzle protector
13. JetBlade nozzle holder
14. 60m Pro Rapid Style Hose Reel with 60m jetting hose and Hose Reel Roller Guide (HGS™)
15. M22 to HT12 Snap Tail with whip plate

Table of Contents **6**
Safety Symbols

General Safety Rules **8**
Work Area Safety
Personal Safety
Water Jetter Use & Care
Service

Water Jetting Safety **8**

Description, Specifications And Standard Equipment **9**
Description
Specifications
Standard Equipment

Machine Assembly & Operation **10**
Engine Oil
Pump/Gearbox Oil
Wheels

Pre-Operation Inspection **10-11**

Machine and Work Area Set-Up **11-14**
Water Supply
Hose Setup
Drain Nozzle Selection

Operating Instructions **15-17**
Drain Cleaning Operation
Pressure Washer Operation
Machine Shut Down
Hose Reel Brake Adjustment
Transportation and Storage

Maintenance Instructions **18-20**
Cleaning
Engine
Battery
Pump Lubrication/Maintenance
Gearbox Lubrication
Preparing Pump for Cold Weather Storage
Machine Storage

Service And Repair **20-29**
Disposal
Machine Data Points
Honda Engine Maintenance Schedule
Water Jetter Maintenance Schedule
Maintenance Log
Troubleshooting

Safety Symbols

In this operator's manual and on the product, safety symbols and signal words are used to communicate important safety information. This section is provided to improve understanding of these signal words and symbols.



This is the safety alert symbol. It is used to alert you to potential personal injury hazards. Obey all safety messages that follow this symbol to avoid possible injury or death.

DANGER indicates a hazardous situation which, if not avoided, will result in death or serious injury.
WARNING indicates a hazardous situation which, if not avoided, could result in death or serious injury.
CAUTION indicates a hazardous situation which, if not avoided, could result in minor or moderate injury.
NOTICE indicates information that relates to the protection NOTICE of property.



This symbol means read the operator's manual carefully before using the equipment to reduce the risk of injury. The operator's manual contains important information on the safe and proper operation of the equipment



This symbol means according to applicable regulations the machine must not be connected to a drinking/potable water supply without a system separator per EN 12729 Type BA. Water flowing through a system separator is considered non drinkable



This symbol indicates that high pressure jets can be dangerous if improperly used the jet must not be directed at persons animals, live electrical equipment or at the appliance itself.



This symbol indicates the risk of fire and explosion from gasoline or other sources causing burns and other injury.



This symbol indicates the risk of breathing carbon monoxide and causing nausea, fainting or death. Risk of poisoning do not breathe in exhaust fumes.



This symbol indicates the risk of loud noises from the machine, causing a risk to hearing impairment, always use proper ear protection, while working with the machine.



This symbol means always wear safety glasses with side shields or goggles when handling or using this equipment to reduce the risk of eye injury.



This symbol indicates the risk of high pressure water directed at body parts, causing skin puncture and injection injuries.



These symbols indicate a risk of burns and hot surfaces, be aware of hot components.

General Safety Rules

⚠ WARNING

Read and understand all instructions. Failure to follow all instructions listed below may result in electric shock, fire, and/or serious injury.

SAVE THESE INSTRUCTIONS!

Work Area Safety

- Keep work area clean and well lit.
- Keep bystanders, children, and visitors away while operating a water jetter. Distractions can cause you to lose control.

Personal Safety

- Stay alert, watch what you are doing and use common sense when operating a water jetter. Do not use a water jetter while you are tired or under the influence of drugs, alcohol, or medication. A moment of inattention while operating water jetters may result in serious personal injury.
- Dress properly. Do not wear loose clothing.
- Contain long hair. Keep your hair, clothing and gloves away from moving parts. Loose clothes, or long hair can be caught in moving parts.
- Do not overreach. Keep proper footing and balance at all times. This enables better control of the water jetter in unexpected situations.
- Use safety equipment. Always wear eye protection.
- Dust mask, non-skid safety shoes, hard hat, or hearing protection must be used for appropriate conditions will reduce personal injuries.

Water Jetter Use and Care

- Do not force the water jetter.
- Store idle water jetters out of the reach of children and other untrained persons. Water jetters are dangerous in the hands of untrained users.
- Maintain water jetterswith care.
- Check for misalignment or binding of moving parts, breakage of parts and any other condition that may affect the water jetters operation. If damaged, have the water jetter serviced before using. Many accidents are caused by poorly maintained water jetters.

Use only accessories that are recommended by the manufacturer for your model and pressure & flow rated accordingly.

Service

- Water jetter service must be performed only by qualified repair personnel. Service or maintenance performed by unqualified personnel could result in a risk of injury.
- When servicing a water jetter, use only genuine replacement parts. Follow instructions in the Maintenance section of this manual. Use of unauthorized parts or failure to follow Maintenance Instructions may create a risk of electrical shock or injury.

Water Jetting Safety

⚠ WARNING

This section contains important safety information that is specific to this water jetter.

Read these precautions carefully before using this High Pressure Cleaning Machine to reduce the risk of electrical shock or other serious injury.

SAVE ALL WARNINGS AND INSTRUCTIONS FOR FUTURE REFERENCE!

Keep this manual with machine for use by the operator.

- Never operate the unit without a pressure control mechanism Hoses can whip, causing striking injuries and spray can penetrate skin and cause serious injury.
- High pressure water can inject under skin resulting in serious injury including amputation. Do not direct spray at people or animals.
- Do not operate unit above the rated working pressure or 60°C (inlet water temperature). This increases the risk of injury, including burns, and damage to the unit.
- One person must control the high pressure cleaning process and water flow.
- Always use appropriate personal protective equipment while handling and using high pressure cleaning equipment. Appropriate personal protective equipment (PPE) includes safety glasses and gloves, and may also include equipment such as latex or rubber gloves, face shields, goggles, protective clothing, respirators, head protection, hearing protection and steel toed footwear.
- Do not eat or smoke while operating or handling high pressure cleaning equipment. This will help prevent contamination with toxic or infectious material.
- Do not spray toxic or flammable liquids. This will reduce the risk of burns, fire, explosion or other injury.
- Practice good hygiene. Use hot soapy water to wash hands and other body parts exposed to drain contents after handling or using drain cleaning equipment. Do not eat or smoke while operating or handling drain cleaning equipment. This will help prevent contamination with toxic or infectious material.

- Gasoline and its vapors are highly flammable and explosive. See engine manual for precautions to reduce the risk of burns, explosions and serious injury while handling and using gasoline.
- Engines produce carbon monoxide, a colorless, odorless poison gas. Breathing carbon monoxide can cause nausea, fainting or death. Do not start and run engine in an enclosed area, even if doors and windows are open. Only operate outside.
- **Always carry the included Medical Alert Card** as it provides critical health information for medical physicians in the event of a high pressure water jetting injury.
- Never attempt to refuel the unit whilst engine is running. Do not spill fuel on or near exhaust take extra care in the refueling process as vapors or liquid can combust due to heat.
- Hot surfaces can cause burns and fire. Keep body parts and flammable material away from hot surfaces.
- Read and understand this manual, the engine manual and the warnings and instructions for all equipment and material being used with this tool before operating. Failure to follow all warnings and instructions may result in property damage and/or serious injury.
- Follow all applicable workplace health and safety regulations and guidelines concerning the use of this equipment.
- Read and understand Australia/New Zealand standard AS/NZS4233.1 High Pressure Systems Part 1: Safe Operation & Maintenance.

If you have any question concerning this Jetwave® product:

– Contact your local Jetwave® distributor.

– Visit jetwave.com.au/find-a-dealer to find your local Jetwave contact point.

Description, Specifications and Standard equipment

Description

The Jetwave® Scorpion™ G2 engine powered Water Jetter/Drain Cleaner is a portable unit designed to use a combination of water pressure and flow to unblock drains and pipes. Water is pumped through the high pressure plunger pump at increased pressure and flow allowing water to be used at such high pressure to penetrate pipe blockages, clean the pipe and push all the debries out. The Scorpion™ G2 Water Jetter is equipped with a gasoline HONDA™ engine to drive the triplex plunger pump.

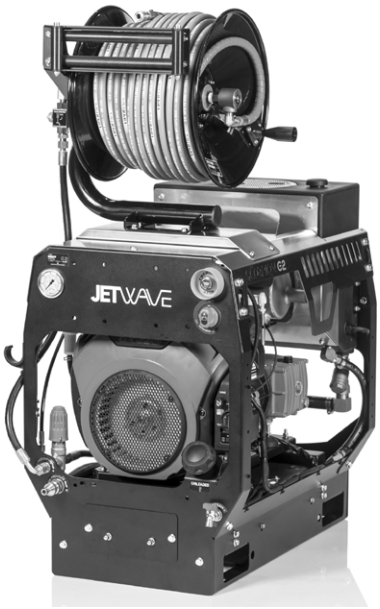

Figure.2 - Scorpion G2 Water Jetter/Drain Cleaner

JETWAVE GROUP

IPX5

Model	Scorpion™ G2FI 280-31
Motor	Honda™ iGX800
Power	24.9HP / 18.6kW
Max Pressure (P)	280 BAR / 4060 PSI / 28 MPa
Max Flow Rate (Q)	31 L/PM / 1860 PH
Max Inlet Temperature (T)	50° / 122° F
Pump	JW Door™ Triplex Plunger
Pump RPM	1450 RPM
Inlet Pressure Min / Max	0.3-7 BAR / 5-100 PSI / 0.03-0.7 MPa
Nozzle Size	08
Weight	155 KG
Manufacture Year	2023

SAMPLE ONLY

Jetwave Group Pty Ltd
10-16 Smith Street, Thebarton 5031 SA Australia

MADE IN AUSTRALIA

Figure.3 - Scorpion G2 Data Plate Example

Standard equipment

A Jetwave Scorpion™ G2 Water Jetter comes with:

- JW Wash Box
- JW Professional nozzle kit
- Hose safety whip restraint
- JW J5500K LTF Gun
- JW Straight Stainless Steel Lance with nozzle
- 60m of 3/8" primary high pressure hose
- 60m Pro Rapid style hose reel with ball valve and HGS™
- Engine Operator's Manual
- Operator's Manual
- (Optional) Remote Mini Reel
- (Optional) JW AUTEC Remote Control System

See the Jetwave® catalogue for specific equipment supplied with each catalogue number.

The machine serial number is located on the frame.

NOTICE This machine is made to clean drains. If properly used it should not damage a drain that is in good condition and properly designed, constructed and maintained. If the drain is in poor condition or not properly designed, constructed or maintained, the drain cleaning process may not be effective or could cause damage to the drain. The best way to determine the condition of a drain before cleaning is through visual inspection with a camera. Improper use of this jetting machine can damage the jetter and the drain. This machine may not clear all blockages.

Machine Assembly

⚠ WARNING

To prevent serious injury during use and prevent machine damage, follow these procedures for proper assembly.

Engine Oil

Unit is typically supplied with engine oil. However, for international shipments the engine may be supplied without oil due to transport and regulatory requirements. Operating the engine with low or no oil will result in engine failure. Before starting the engine, check and fill with the recommended oil as specified in the supplied engine operator's manual, which provides details on checking oil level, adding oil, and oil selection.

Pump/Gearbox Oil

Units are typically supplied with oil in the pump and gearbox. However, for international shipments the unit may be supplied without oil due to transport and regulatory requirements. Before operation, check and fill the pump and gearbox with the recommended oil to the correct level (approximately halfway on the sight glass) as specified in the Maintenance section.

Wheels

(Optional Wheel Kit) Wheels, Axles & Locking nuts are found within the box. To assemble the wheels, slide axles through axle location hole, slide wheels on each side find centerline and proceed to install locking nuts each side with 27mm socket tool.

Pre-Operation Inspection

⚠ WARNING



Before each use, inspect your water jetter and correct any problems to reduce the risk of serious injury from high pressure water and other causes and prevent unit damage. Always wear appropriate safety equipment, when inspecting your unit.

1. Make sure that the battery isolator and engine switch is in the OFF position.

2. Clean any oil, grease or dirt from the equipment, including the handles and controls. This aids inspection and helps prevent the machine or control from slipping from your grip.

3. Inspect the water jetter and accessories for the following:
   - Proper assembly and completeness.
   - Broken, worn, missing, misaligned, binding or loose parts.
   - Presence and readability of the warning labels. (See Figure 4A)
   - Any other condition which may prevent the safe and normal operation.

If any problems are found, do not use the unit until the problems are corrected.



Figure.4A - Scorpion G2 Warning Labels

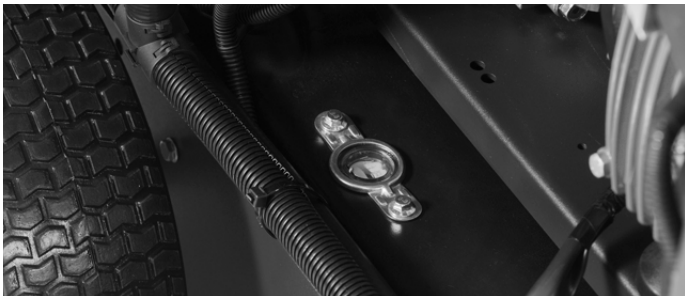

Figure.4B - Scorpion G2 Fuel Level Gauge

Clean water filter (Figure 5). Using the drain valve, drain the tank. Unscrew the clear plastic bowl cover anti-clockwise and remove and clean the mesh filter (note: ensure the o-ring is set back into place before screwing plastic bowl back on). Dirt and debris can restrict the water flow to the pump and cause performance issues.

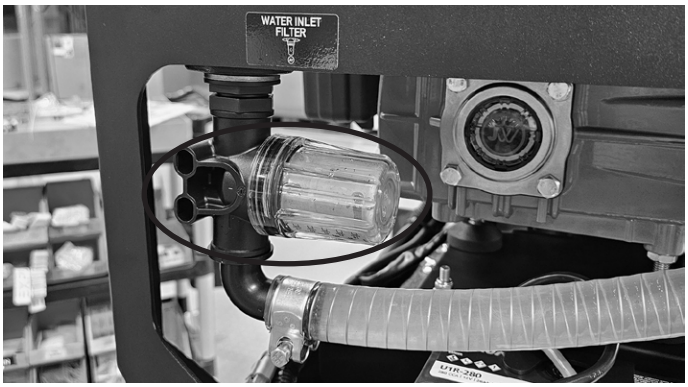

Figure.5 - Scorpion G2 Water Filter

4. Inspect the water jetter nozzle orifices for any damage or blockage. Blockages can be cleaned with a nozzle cleaning tool. Use care not to enlarge nozzle orifices while cleaning. Damaged nozzles or nozzles with enlarged orifices can decrease unit performance and should be replaced.

5. Inspect the hoses, connectors and fittings for wear and damage. If there are any kinks, cracks, breaks or wear through the outer jacket of the hose or other damage, do not use the hose. Damaged hoses can burst or leak high pressure water and cause serious injury. Replacement hoses and fitting should be rated at or higher than the unit pressure rating.

6. Inspect and maintain the engine per the engine operator's manual.

7. Check engine fuel level (Figure 4B). If needed, add unleaded gasoline. See engine operator's manual for requirements. Use caution when handling gasoline. Work in a well ventilated area. Never fill the tank while unit is running, do not overfill tank and do not spill fuel. Make sure tank cap is securely closed.

8. Check the oil level(s) in the pump and gearbox through the sight glass and add oil if needed (see Maintenance Instructions section). Inspect Engine as directed in the engine operator's manual.

Machine and Work Area Set-up

⚠ WARNING



Always wear safety glasses, gloves and other appropriate protective equipment when setting up your water jetter. Rubber soled, non-slip shoes can help prevent slipping on wet surfaces.
Engines produce carbon monoxide, a colorless, odorless poison gas. Breathing carbon monoxide can cause nausea, fainting or death. Do not start and run engine in an enclosed area, even if doors and windows are open. Only operate outside.

Set-up the unit and work area according to these procedures to reduce the risk of injury from high pressure water, chemical burns, infections, carbon monoxide and other causes, and prevent unit damage.

1. Check work area for:
   - Adequate lighting.
   - Flammable liquids, vapors or dust that may ignite. If present, do not work in area until sources have been identified and corrected. The machine is not explosion proof and can cause sparks.
   - Clear, level, stable dry place for machine and operator.
   - If needed, remove the water from the work area. Wood or other coverings may need to be put down.
   - Unit location that is in a well ventilated outdoor area. Do not place the unit indoors, even with doors and windows open. Unit can be located remotely from the point of use.
   - Suitable water supply. Clear path to transport the unit to the set up location.
2. Inspect the pipe to be unblocked, and make sure no materials or elements are in the way of the unit.
3. Determine the correct equipment for the application.
4. Make sure all equipment has been properly inspected.
5. Evaluate the work area and determine if any barriers are needed to keep bystanders away. Bystanders can distract the operator. If working near traffic, erect cones, signs or other barriers to alert drivers.
6. Take the unit to the well-ventilated outdoor work area along the clear path. See Transportation Section. Be aware of possible slip hazards. Wear appropriate footwear to help prevent slips.

Water Supply

WARNING: This high water jetter is only allowed to be connected with the drinking water mains, when an appropriate backflow preventer has been installed, as per AS/NZS 60335.2.79. Follow all local standards and regulations applicable to water connection.

According to the applicable regulation, the appliance must never be used on the drinking water supply without a system separator. Use a suitable system separator as per EN 12729 Type BA. Water flowing through a system separator is considered non-drinkable

Run a hose from the water source to the unit water inlet. Use the largest diameter, shortest length hose possible. A 3/4" I.D. Inlet hose is the minimum recommended size.

Dirt and debris in the water supply can cause excess pump wear, clog the unit filter, nozzles and reduce performance.

Do not use water from ponds, lakes or other sources that may be contaminated.

Fill the water tank prior to starting the unit.

The water tank is equipped with a:

- Low water level shut-off to prevent pump damage from insufficient water. This will shut OFF the engine when the tank water level falls below a predetermined level.
- Float valve to shut-off inlet water when the tank is full, preventing water spillage through the tank vent.

Warm water can be used for improved cleaning. Do not use water hotter than 60°C. When using warm water, use appropriate personal protective equipment to reduce the risk of burns.

When using in cold weather, use precautions to prevent water from freezing in the pump. This can damage the pump.



Figure.6 - Scorpion G2 Onboard Water & Bypass Tank

Drain Preparation

If working through a manhole, storm grate or other large access, use pipe and fittings to create a guide for the jetter hose from the drain opening to operation point. This will prevent the jetter hose from whipping around in the access and protect the hose from damage (Figure7).

6. If needed, place protective covers in the work area. The drain cleaning process can be messy.
7. Take the jetter to the well-ventilated outdoor work area along the clear path. See Transportation Section. Be aware of possible slip hazards. Wear appropriate footwear to help prevent slips.

Hose Set-Up

Use care when routing jetter hoses. Routing hoses over rough surfaces, sharp edges, crossing hoses, etc. can damage the hose jacket. Keeping the jetter hose on the reel(s) will help to minimize hose damage.

The Scorpion G2 is equipped with two hose reels, a primary reel mounted to the jetter frame and the remote reel which has a separate base. Typically the primary reel is equipped with larger hose suitable for jetting larger diameter drains or supplying water to the remote reel. The remote reel is typically equipped with smaller hose used for jetting smaller diameter drains.

1. Select a jetter hose size appropriate for the drain being cleaned. See Jetter Hose Selection Chart.
2. Locate the desired hose reel (primary or remote) for jetting within 1 meter of the drain opening. Do not allow excessive amounts of hose outside of the drain to prevent hose damage. If the hose reel cannot be placed within 1 meter of the drain opening, extend the drain opening back to the hose reel with similar sized pipe and fittings.



Figure.7 - Extending the Drain Opening to the Operation Point

1. Water Control Valve. Choose the valve to be used to control water flow. If using a foot valve to control water flow, route a hose from the jetter pump to the IN fitting on the foot valve. Connect the hose on OUT fitting of the foot valve to the hose reel to be used. Connect so that the foot valve hose feeds into the ball valve on the hose reel. (See Figure 8.)



Figure.8 - Jetwave (Optional) G2 Remote Reel

2. If not using the foot valve, use the ball valve on the reel being used to control water flow. Route a hose from the jetter pump into the ball valve on the hose reel. Make sure quick connect fittings are secure.
3. Position the reel for accessibility. You must be able to control the jetter hose and the water control valve.
4. Mark the jetter hose near the end to indicate when the nozzle is getting close to the drain opening when withdrawn. This will help prevent the nozzle from coming out of the drain and whipping around. The distance depends on the configuration of the drain, but should be at least 4'/1.2 m
5. Select a nozzle and attach. Use nozzles specifically sized for the jetter being used. Using incorrect nozzles can cause poor performance (low operating pressure or low flow) or may damage the jetter with excessively high pressures. Make sure the nozzle orifices are clear and open. See Jetter Nozzle Selection Chart.
6. To ensure nozzle doesn't get lost in the drain the remote mini reel us screw fittings on the connection to the nozzle (See Figure 9). Confirm that the connection is secure, it is recommended to use thread tape to stop any water leaks but not required.

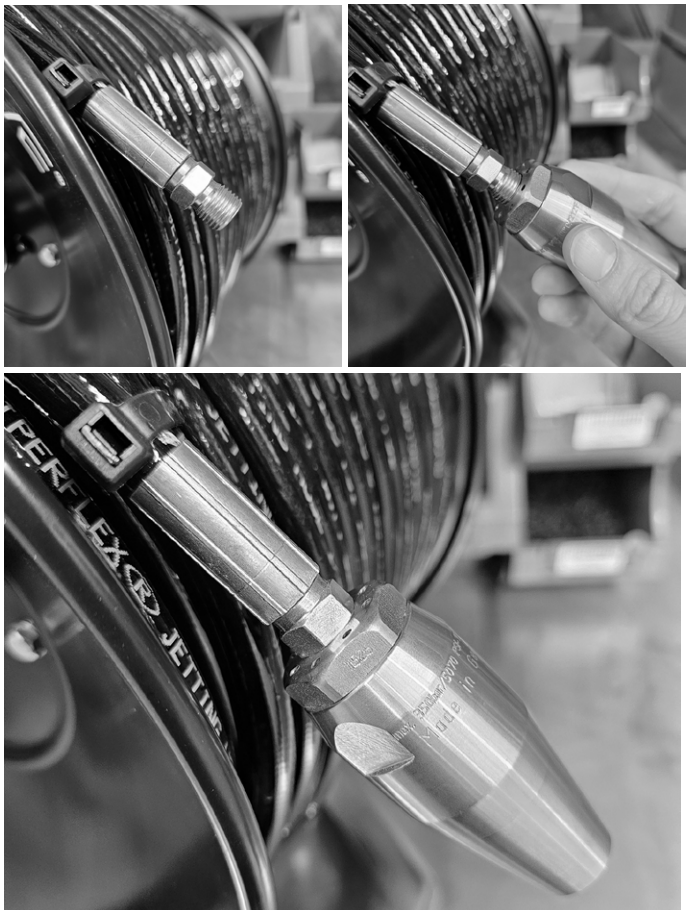

Figure.9 - Nozzle Screw Fit Operation

Only use nozzles for the pipe sizes they are rated for. Using a nozzle designed for smaller pipe sizes in larger diameter pipe increases the risk of the nozzle changing direction in the drain, exiting at the user and causing serious injury.

For drains 6"/150 mm and smaller, no extension is needed. If needed, firmly hand tighten the extension to the nozzle – do not over tighten. See Figure 10.



Figure.10 - Extension Bar

Jetter Hose Selection Chart

Applications	Pipe Size	Suggested Hose (ID)
Kitchen sinks, laundry tubs and stacks, clean-outs, and vents.	2" – 3"	1/8" Whip hose (optional equipment)
Shower and floor drains, lateral lines, and grease traps.	3" – 4"	1/8" or 3/16" Whip hose (optional equipment) or 1/4" Remote Reel
Sewer and storm water lines	4" – 6"	1/4" Remote Reel or 3/8" Primary Reel
Lateral and main lines.	6" – 10"	3/8" Primary Reel

Selection Chart / Nozzle Kit Inclusions

Penetrating Nozzle: 3 or 6 Jet thrusters in reverse plus one jet pointed forward to penetrate solid grease, sludge or sediment blockages. The forward jet blasts a small hole in the blockage for the nozzle to follow. Includes cowl protection, for 3" to 6" drain sizes.	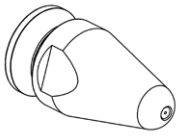
Negotiator Nozzle: 3 or 6 Jet thrusters in reverse and one forward, use this nozzle to help negotiate more difficult bends or gully traps as it is of a short construction, for 3" to 6" drain sizes.	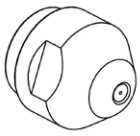
1/4" Extension Bar: To be used in applications of large diameter pipes, prevents nozzles from turning around within the drain pipe.	
JW Sidewinder: Use to clear roots and other type of blockages. Uses a front facing oscillating jet for more complete drain cleaning. Attaches to hose with quick connect. For drain sizes 4" to 10", as noted here.	
Spanner, Nozzle Tip Cleaning Tool: Spanner to assist in assembling nozzle head to quick coupling tail and cowl. Nozzle Tip Cleaning Tool to be used to clear blockage in all nozzles. **WARNING Never use the Nozzle Tip Cleaning Tool on a pressuired line, always make sure you have discharged the high pressure line safely to clear all water. Only ever use the tool when nozzle is disconnected from hose which allows for easier and safer cleaning.**	
(Optional) Micro Drain Nozzle With Whip Hose: Optional Whip Hose Attachment for work on smaller diameter pipes (3" to 4") with tighter radius's/bends. This nozzle is smaller in size and is permantley fixed to the whip hose, connects straight to gun via J5500K.	

WARNING if Using the above nozzles for drains larger than 6"/150 mm and up to 10"/250 mm, an extension must be used to reduce the risk of the nozzle changing direction in the drain, exiting at the user and causing serious injury.

Operating Instructions

⚠ CAUTION



Always wear eye protection to protect your eyes against dirt and other foreign objects. Always wear appropriate personal protective equipment for the work environment.

Never operate the jetter with the hose end out side of the drain. Hose can whip, causing striking injuries and spray can penetrate skin and cause serious injury.

High pressure fluid can inject under skin resulting in serious injury, including amputation. do not direct spray at people or animals. do not operate jetter above pressure rating or 60°C (inlet water temperature). This increases the risk of injury, including burns, and damage to the jetter. one person must control the jetting process and water flow. If the jetter hose comes out of the drain, the operator must be able to shut off the water flow to reduce the risk of the jetter hose whipping, causing striking and high pressure injection injuries.

Always use appropriate personal protective equipment while handling and using drain cleaning equipment. drain may contain chemicals, bacteria and other substances that may be toxic, infectious, cause burns or other issues. Appropriate personal protective equipment always includes safety glasses and gloves, and may also include equipment such as latex or rubber gloves, face shields, goggles, protective clothing, respirators, and steel toed footwear.

Follow operating instructions to reduce the risk of injury from whipping hoses, high pressure liquid injection, carbon monoxide and other causes.

1. Make sure that machine and work area is properly set up and that the work area is free of bystanders and other distractions. If the jetter is located remotely from the point of use, another person should be located at the jetter.
2. Insert the hose with nozzle attached into the drain at least 1m (3ft) so that the end of the hose will not come out of the drain and whip around when the machine is started.
3. Ensure fuel valve is in the OPEN position before starting the machine, when not in use CLOSE the fuel valve as pictured below.
4. Turn the Battery Isolator switch ON and confirm the Emergency Stop button is in the out position (rotate button clockwise) (Figure 11).

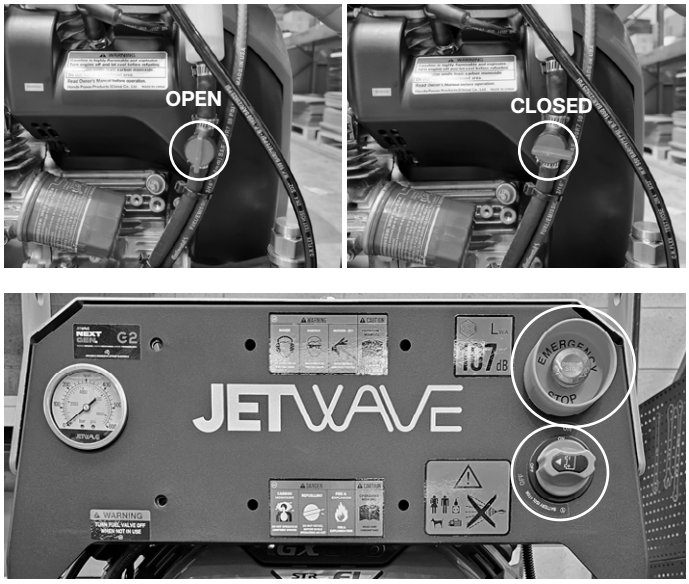

Figure.11 - Emergency Stop & Battery Isolator

5. Confirm that the water supply is turned on and the water tank is full. Never start the engine without the water supply turned ON. This can damage the pump.
6. Turn the engine switch to the START position, and hold it there until the engine starts. When the engine starts, release the engine switch, allowing it to return to the ON position.

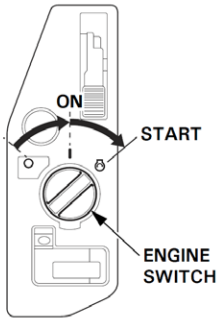

NOTE:
- If the engine fails to start within 5 seconds, release the engine switch and wait at least 10 seconds before operating the starter again.
- Using the electric starter for more than 5 seconds at a time will overheat the starter motor and can damage it.

7. **COLD START HONDA GX690**
To start a cold engine, pull the choke knob to the CLOSED position and follow the regular engine start procedure. After engine start, warm up the engine for 2 or 3 minutes, gradually pushing the choke knob to the OPEN position as the engine warms up.

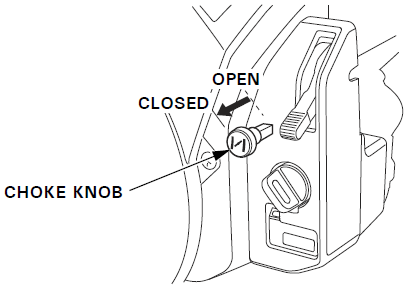

8. **(iGX Engines Only)**: the Honda iGX700/800 is an EFI auto throttle engine (If Applicable) with auto choke. Engine will automatically idle down the revs when the water flow is closed and will automatically rev up when the water flow is open.

9. COLD START JX750
To start a cold engine, pull the choke knob OUT and follow the regular engine start procedure. After engine start, warm up the engine for 2 or 3 minutes, gradually pushing the choke knob back into position as the engine warms up, adjust throttle as neccesary.

10. JW AUTEC REMOTE CONTROL START (OPTIONAL UPGRADE)

11. With everything setup you are now ready to use the JW Autec Remote Control System, assume jetting position next to IP then press the **GREEN ACTIVATE** Button on the remote.

12. Remote is now activated, press **ENGINE START** the engine will now start and get to full revs, this machine is an **AUTO SPEED** Engine will automatically idle down the revs when the ball valve is closed and will automatically rev up when the ball valve is open.

13. With the engine running, press the **PRESSURE ON** button to open the electronic ball valve back at the machine, water will now flow through the machine to the nozzle, grip hose near piping and brase for water flow.

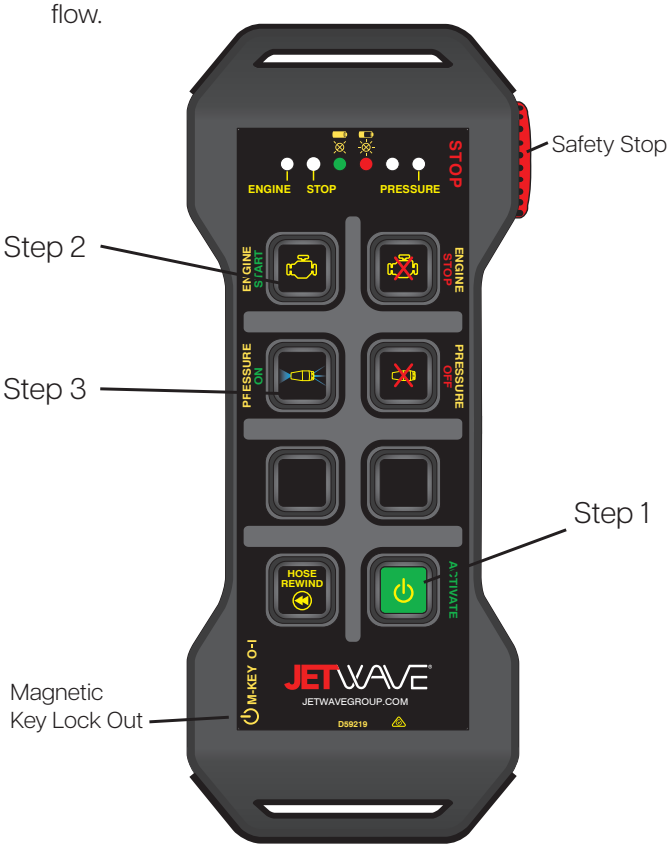

Figure.11 - JW Autect Remote Control

14. **ENGINE LIGHT:** Fast Blinking Flash = Ready to operate Slow Blinking Flash = Not Ready to operate and may require reset

15. When the water control valve is closed and the jetter is running, the unloader valve will recirculate water back to the tank.

1. MANUAL OPERATION - JW AUTEC (OPTIONAL UPGRADE)
Turn the engine switch to the START position, this will start the engine.

2. With the desired hose and nozzle already in the IP/ drain, proceed to open main hose reel ball valve (if jetting with mini reel) then flip the MISSILE SWITCH to OPEN the electronic ball valve. Refer to previous instructions on controlling the jetting hose down the IP.



Figure.12 - Manual Missile Switch Override



Figure.13 - Proper Operating Position

JETTER & HOSE OPERATION
Grip the hose near the pipe opening. Open the selected water control valve (ball or foot valve). Confirm that water flows freely through the nozzle. Close water control valve. When the water control valve is closed and the jetter is running, the unloader valve will recirculate water back to the tank.

This operating position will help to maintain control of the jetter hose. Jetting the Drain

When jetting a drain, typically the hose is fed into the drain the full distance to be cleaned and slowly pulled back. This allows the high pressure water directed at the drain walls to remove build-up.

Release the locking pin on the hose reel. With at least 1m (3 ft) of hose in the drain and one hand on the hose to control its movement, open the flow control valve.

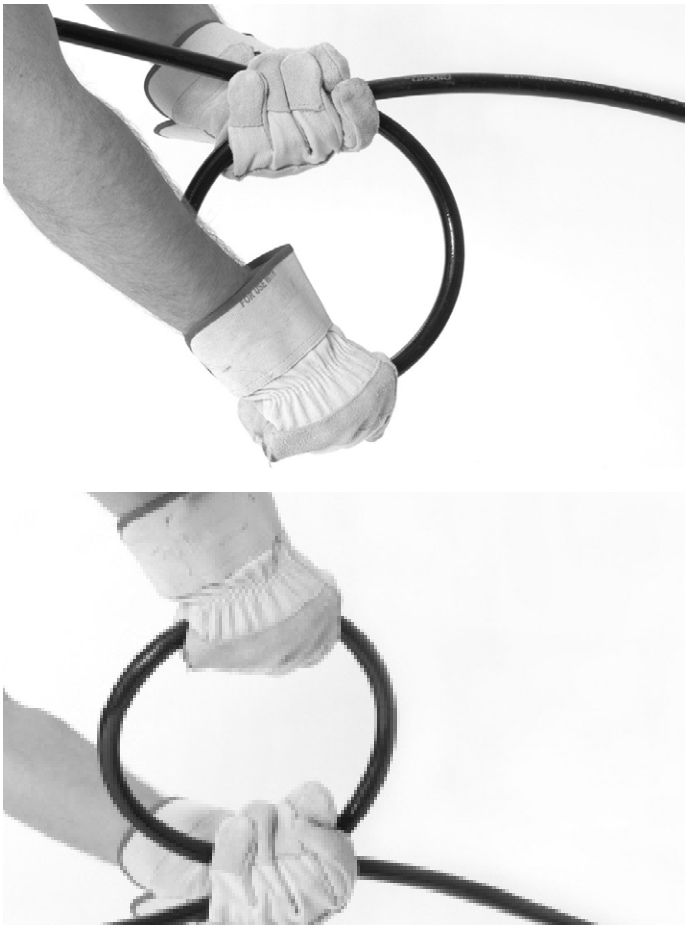

Figure.14 - Hose Operation

The reverse jet thrusters on the nozzle will help pull the hose into the drain. Feed the hose in the drain as far as needs to be cleaned. If the hose stops it has encountered some type of obstruction.

If the nozzle cannot pass through an obstruction, such as a change in direction (trap, turn, etc.) or a blockage:

- Use sharp thrusts of the hose.
- Rotate the hose a quarter to half turn to orient the set of the hose to the direction change (If the hose is rotated, once through the obstruction, turn the hose back to help prevent kinks) See Figure 14.
- Use a flexible leader or smaller diameter hose.

Once past a blockage, take the time to clean that section of drain prior to moving forward. Move several feet past the area of the obstruction and slowly pull the nozzle back through the area of the obstruction. Do this several times and then move further into the drain.

Watch the drain water level. If the water level gets too high, you may need to turn the jetter OFF and allow the water to drain prior to continuing. Jetting when the line is full of water is less effective than when the line is empty.

If the water level in the water tank falls below ¼ full, the float valve will turn the engine OFF. Generally, at this point you must allow the tank to refill before restarting the jetter. If that does not work, see troubleshooting section.

Once the nozzle is the desired distance into the drain, slowly (0.3m/minute for heavy drain accumulations) pull the nozzle back through the drain. Use one hand to control the hose and the other to wind the hose onto the reel. Watch as the nozzle gets closer to the drain opening that the nozzle does not come out of the drain while water is flowing. This could allow the hose to whip around and cause striking and high pressure fluid injuries. Always control the hose. Look for the mark on the hose near the end.

With hose still in the drain, turn OFF the engine as directed in the engine manual, and open water control valve to release the system pressure. Never leave the system pressurized. If needed, change the nozzle and continue cleaning following the above process. Several passes through a line are recommended for complete cleaning.

Using Water Jetter Machine as a Pressure Cleaner

⚠ CAUTION

Wash down gun and lance is supplied as standard to help with site and pipe clean up.

This Jetwave water jetting machine can also be used as a pressure washer. Use as a pressure washer is similar to use as a jetter, and those instructions should be used in conjunction with the following.

1. Locate an appropriate work area
2. Make sure all equipment has been properly inspected
3. Attach the wash wand to the jetter hose using the quick connect coupling via the m22 to 1/4" tail adaptor. Make sure the hose is securely connected to prevent it from coming off under pressure.
4. When using the jetter as a pressure wash, the wash wand acts as the water control valve. Open other valves in the system to allow water to flow, mini reel and main reel.
5. Connect an appropriate water supply, as discussed earlier, to the jetter. Never start the engine without the water supply turned ON. This can damage the pump.
6. Wash Wand Lock Out – the wash wand includes a lock out on the back of the trigger. Flip the lock out down to prevent the operation of the trigger when the wash wand is not in use (Figure 14).
7. With the wand pointed in a safe direction, squeeze the wash wand trigger to reduce pressure and allow the engine to be started. Following the starting instructions in the previous section.
8. When pressure washing use both hands to grip and direct the gun & lance for greater control. Never direct the gun & lance at people. High pressure fluid can inject under skin resulting in serious injury. Never direct gun & lance at electrical equipment or wiring to reduce the risk of electrical shock. Use care when using the pressure washer. Holding the nozzle too close to a surface can damage it. Test a small, inconspicuous area to confirm the settings work as desired. and turn OFF the engine as directed in the engine manual. Squeeze the trigger and ensure all water control valves are also in open position to release system pressure. Never leave the system pressurized.



Figure.14 - Gun and Lance

Machine Shut Down Procedure

1. When water jetting/high pressure cleaning task is complete, release high pressure gun trigger (if applicable) or leave the jetting hose in the IP.
2. Return to the unit controls.
3. Idle down unit RPMs via throttle control (if applicable)
4. Turn the engine switch to the OFF position

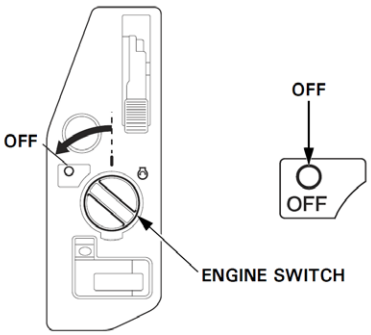

5. Turn the engine key switch to the OFF position. Once the machine has fully stopped, close all ball valves and ensure that no residual pressure remains in the high-pressure system.

   Residual pressure may remain in the hose and lines after shutdown. To verify that pressure has been relieved, carefully open the ball valves only when the hose is securely positioned inside the pipe/drain.

   (WARNING: Opening a valve while the hose is not secured in side the pipe/drain, can release high-pressure water suddenly and may result in serious injury or equipment damage.)
6. Turn water supply OFF.
7. Disconnect high and low pressure hoses and coil the assembly for safety and proper storage.

Machine Shut Down Procedure - JW AUTEC Remote System (Optional)

1. When water jetting/high pressure cleaning task is complete, release high pressure gun trigger (if applicable) or leave the jetting hose in the IP.
2. Using the remote control, press the ENGINE OFF button to stop the machine. Once the machine has fully shut down, close all ball valves and ensure that no residual pressure remains in the high-pressure system.

   Residual pressure may remain in the hose and lines after shutdown. To confirm that pressure has been relieved, carefully open the ball valves only when the hose is securely positioned inside the IP pipe/drain or directed into a safe drainage point.

   (**WARNING: Opening a valve while the hose is not secured in the IP pipe/drain can cause a sudden release of high-pressure water and may result in serious injury or equipment damage.)**
3. Turn off water supply
4. Disconnect nozzles from hose reel or gun/lance.
5. Wind up the hose reel and ensure to put the locking pin on the hose reel.
6. Disconnect high and low pressure hoses and coil the assembly for safety and proper storage.

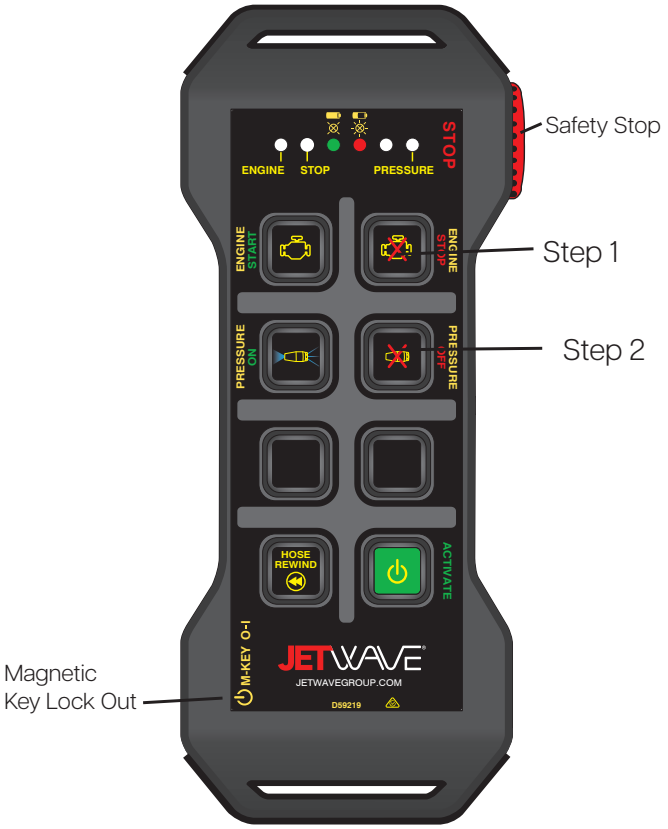

Hose Reel - Brake Adjustment

The primary hose reel is equipped with an adjustable brake to prevent the hose from over spooling off the reel under its own weight. Tightening nut (7mm spanner) increases the drag on the reel, loosening decreases the drag. Adjust as desired. (to resist hose over spooling off reel) (Figure 15). To apply tension brake, grab and pull the black switch to engage brake.

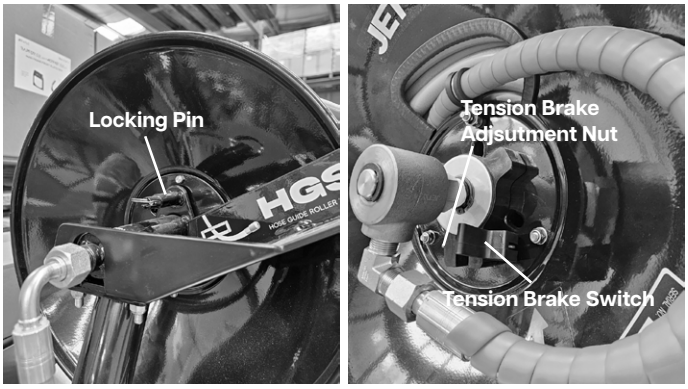

Figure.15 - Brake Adjustment & Locking Pin

Transportation and Storage

1. Turn off the fuel valve and the battery isolation switch.
2. Drain water from unit as needed.
3. Coil hoses and secure equipment appropriately. All loose material must be removed.
4. Unit weighs 195 KGS (approx.) Use appropriate equipment and methods to load and transport.

Maintenance Instructions

⚠ WARNING

Before performing any maintenance, engine switch & battery isolation switch should be in OFF position to prevent inadvertent operation. Open water control valve to release any fluid pressure in system (Ensure no nozzle is connected and hose is secured when depresserings the line)

Always wear safety glasses and gloves when performing any maintenance to help protect against drain chemicals and bacteria.

Cleaning

The hose should be cleaned as needed with hot, soapy water and/or disinfectants. Do not allow water to enter the engine or electrical system. Do not clean with pressure washer. Wipe the unit down with a damp cloth.

Engine

Maintain the engine as directed in the engine operator's manual supplied with the unit. An hour meter is included on the engine to monitor use.

Battery

NOTE!
Connect negative terminal to black negative post, as the unit may shipped disconnected. (if applicable)

Safety notes regarding the battery
Please observe the following warning notes when handling batteries.


Observe the directions on the battery, in the instructions for use and in the vehicle operating instructions.


Wear an eye shield


Keep away children from acid and batteries.


Fire, sparks, open light and smoking not allowed.


Danger of causticization


First aid.


Warning note.


Disposal.


Do not throw the battery into the bin.

Danger

Risk of injury! Ensure that wounds never come into contact with lead. Always clean your hands after having worked with batteries.

To change battery (if applicable)

1. Unscrew battery cover tray bolts and slide battery out.
2. Disconnect ground (-) cable connection first, followed by positive (+) cable connection.
3. Remove battery.
4. Reverse procedure to install.

Note: Before removing the battery, make sure the negative pole lead is disconnected. Check that the battery pole and pole terminals are adequately protected with pole grease.

Replacement batteries should have the following specifications:

- Size (L x W x H): 196 x 128 x 184 (mm)
- Voltage: 12v
- Cold Cranking Amps (CCA): 280
- 26 Ah
- Terminal Type: Standard - +
- Brand: Delkor | Model: U1R-280

Pump Lubrication/Maintenance

Check the pump oil level prior to each use. Place the unit on a level surface. Wipe any dirt and debris from the area of the dipstick and sight-glass. Oil level should be at the middle of the sight-glass (Figure 12). If needed, remove the dipstick and add SAE 15W-40 Mineral non-detergent oil, fill to half-way on the sight-glass. Do not overfill, reinstall dipstick.

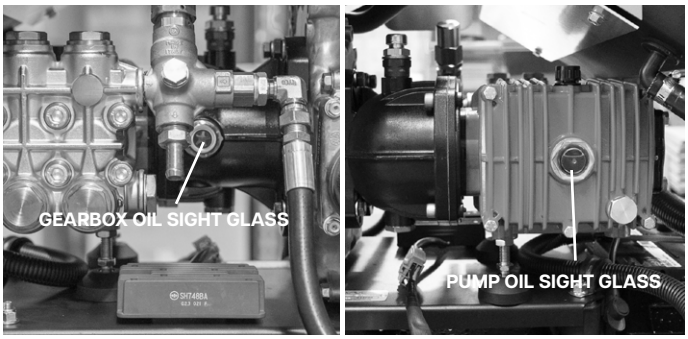

Figure.12 - Checking Pump and Gearbox Oil Level

Change oil in pump after first 25 hours of operation and every 250 hours of operation after that, refer to maintenance schedule section. With the pump warm from operation, remove plug on bottom of pump and drain oil into suitable container. Replace plug. Fill to approximately half-way on the sight-glass with SAE 15W-40 Mineral non-detergent oil using the checking procedure.

At 1000 hours of use (less in severe use conditions) the Scorpion G2 should be taken to a Jetwave Independent Service Center for pump seal and valve service.

Gearbox Lubrication

Check the gearbox oil level prior to each use. Place the unit on a level surface. Wipe any dirt and debris from the area of the dipstick and sight-glass (Figure 12). Oil level should be at the middle of the sight-glass. If needed, remove the dipstick and add Castrol Alpha SP 220 gear lubricant oil, fill to half-way on the sight-glass. Do not overfill, reinstall dipstick.

Change oil in gearbox every 500 hours of operation. With the gearbox warm from operation, remove plug on bottom of gearbox and drain oil into suitable container. Replace plug. Fill to half-way on the sight-glass with Castrol Alpha SP 220 gear lubricant oil.

Preparing Pump for Cold Weather Storage

If the unit will be stored under conditions where the temperature is near or below 0°C, the unit must be properly prepared. If water freezes in the pump, it can damage it.

After the tank is drained (if applicable), remove the hose from the water inlet. Open all valves in the system and use compressed air to force any water out of the system also flush device with anti-freezing agent to prevent freezing during cold weather storage.

Machine Storage

Store the unit in a well ventilated area protected from the weather elements. Keep the machine in a locked area that is out of reach of children and people unfamiliar with such equipment. This machine can cause serious injury in the hands of untrained users. See Maintenance section for information on cold weather storage. See engine operator's manual for specific information on engine storage.

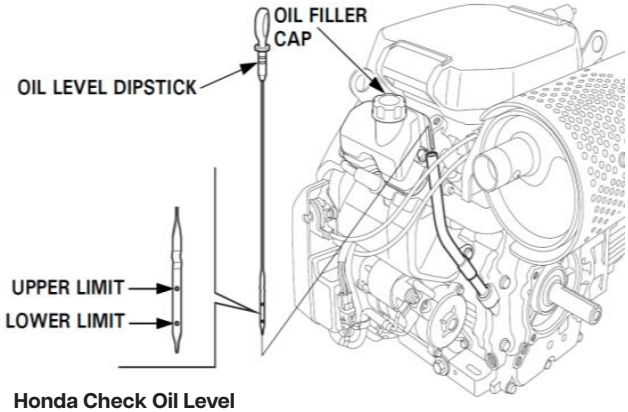

Honda Check Oil Level

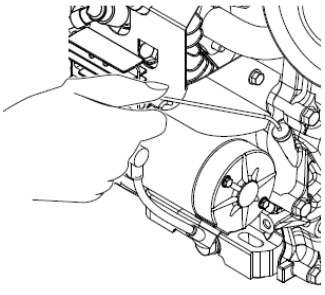

JX 750 Check Oil Level

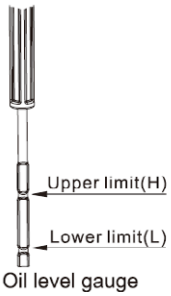

Service And Repair

⚠ WARNING

Improper service or repair can make machine unsafe to operate.

The “Maintenance Instructions” will take care of most of the service needs of this machine. Any problems not addressed by this section should only be handled by an authorized Jetwave service technician.

Water Jetter should be taken to a Jetwave Independent Service Center or returned to the factory.

For information on your nearest Jetwave Independent Service Center or any service or repair questions:

- Contact your local Jetwave distributor.
- Visit jetwavegroup.com.au/find-a-dealer/ to find your local Jetwave contact point.
- Contact Jetwave Technical Service Department at service@jetwave.com.au or call +61 8 8371 3599

Disposal / Environmental Protection

Parts of the water jetter contain valuable materials and can be recycled. There are companies that specialize in recycling that may be found locally. Dispose of the components in compliance with all applicable regulations. Contact your local waste management authority for more information.

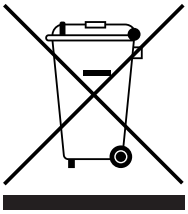

Please do not release engine oil, pump & gearbox oil, diesel and petrol into the environment. Protect the ground and dispose of used oil in an environmentally-clean manner.



The packaging material can be recycled. Please do not throw the packaging material into household waste; please send it for recycling

Declaration of Conformity

We hereby declare that the machine described below complies with the relevant basic safety and health requirements of the EU Directives listed below, both in its basic design and construction as well as in the version put into circulation by us. This declaration shall cease to be valid if the machine is modified without our prior approval

Product: Water Jetting System

Trade Name: Scorpion G2

Relevant EU Directives
2006/42/EC
2000/14/EC

Relevant AS/NZS Directives
60335.5.2.79
4233.1:2013
4233.2:2013

Applied standards
EN 1829 -2

Applied conformity evaluation method
2000/14/EC: Appendix V
Sound power level dB(A)
Scorpion G2
Measured: 105
Guaranteed: 107

The signatories act on behalf of and with the authority of the company management.



L. Seco
Business Director

Jetwave Group Pty Ltd
10-16 Smith Street, Thebarton 5031 SA, Australia
Tel: +61 8 8371 3599
Fax: +61 8 8371 4497
ACN: 056 759 892

Type		Scorpion G2 275-20	Scorpion G2 280-26	Scorpion G2 350-23	Scorpion G2 FI 280-31
Code		HJ4000-20PH	HJ4000-26PH	HJ5000-23PH	HJ4000-31PHFI
Motor					
Honda Petrol Engine		GX690, 2 cylinder, 4-stroke OHV	GX690, 2 cylinder, 4-stroke OHV	GX690, 2 cylinder, 4-stroke OHV	iGX800, 2 cylinder, 4-stroke OHV
Maximum torque at 3600rpm	kW/HP	16.5 / 22.1	16.5 / 22.1	16.5 / 22.1	18.6 / 24.9
Operating Speed	RPM	3200	3200	3200	3200
Fuel Tank	L	25	25	25	25
Fuel	Type	Petrol, unleaded	Petrol, unleaded	Petrol, unleaded	Petrol, unleaded
Battery	V / Ah / CCA	12 / 26 / 280	12 / 26 / 280	12 / 26 / 280	12 / 26 / 280
Water Connection					
Max feed temperature	°C / F	50 / 122	50 / 122	50 / 122	50 / 122
Min feed volume	l/m (l/h)	21 / 1260	27 / 1620	24 / 1440	32 / 1920
Max feed pressure	PSI (bar) MPa	101 / (7) / 0.7	101 / (7) / 0.7	101 / (7) / 0.7	101 / (7) / 0.7
Min feed pressure	PSI (bar) MPa	4.35 / (0.3) / 0.03	4.35 / (0.3) / 0.03	4.35 / (0.3) / 0.03	4.35 / (0.3) / 0.03
Inlet hose diameter (min.)	Inch / mm	3/4" / 19mm	3/4" / 19mm	3/4" / 19mm	3/4" / 19mm
Performance Data					
Working pressure	PSI (bar) MPa	4000 (275) 27.5	4060 (280) 28	5075 (350) 35	4060 (280) 28
Max excess operating pressure (safety valve)	PSI (bar) MPa	5075 (350) 35	5075 (350) 35	5650 (390) 39	5075 (350) 35
Flow rate	l/m (l/h)	20 / 1200	26 / 1560	23 / 1380	31 / 1860
Nozzle Size	Oriface	05	065	05	08
Type of protection	IP	IPX5	IPX5	IPX5	IPX5
Oil					
Pump oil quantity/type	mL	1040 / SAE 15W-40	1040 / SAE 15W-40	1040 / SAE 15W-40	1040 / SAE 15W-40
Gear oil quantity/type	mL	320 / Castrol Alpha SP220	320 / Castrol Alpha SP220	320 / Castrol Alpha SP220	320 / Castrol Alpha SP220
Engine oil quantity/type	mL	1500 / 10W30	1500 / 10W30	1500 / 10W30	1500 / 10W30
Dimensions & Weight					
Length x Width x Height	mm	875 x 550 x 870	875 x 550 x 870	875 x 550 x 870	875 x 550 x 870
Typical operating weight	kg	195	195	195	195
Values Determined as per AS/NZS 60335.2.79					
Max reaction/recoil force of trigger gun	N	77	102	100	121
Hand spray gun	m/s^2	-	-	-	-
Spray lance	m/s^2	-	-	-	-
Uncertainty K	m/s^2	-	-	-	-
Sound pressure level L_{pa}	dB(A)	91	91	91	91
Uncertainty K_{pa}	dB(A)	2	2	2	2
Sound Power Level L_{wa} + Uncertainty K_{wa}	dB(A)	107	107	107	107

Type		Scorpion G2 JX 275-20	Scorpion G2 JX 280-26	Scorpion G2 JX 350-23
		HJ4000-20PJX	HJ4000-26PJX	HJ5000-23PJX
Motor				
Petrol Engine		JX750, 2 cylinder, 4-stroke OHV	JX750, 2 cylinder, 4-stroke OHV	JX750, 2 cylinder, 4-stroke OHV
Maximum torque at 3600rpm	kW/HP	17.89 / 24	17.89 / 24	17.89 / 24
Operating Speed	RPM	3200	3200	3200
Fuel Tank	L	25	25	25
Fuel	Type	Petrol, unleaded	Petrol, unleaded	Petrol, unleaded
Battery	V / Ah / CCA	12 / 26 / 280	12 / 26 / 280	12 / 26 / 280
Water Connection				
Max feed temperature	°C / F	50 / 122	50 / 122	50 / 122
Min feed volume	l/m (l/h)	21 / 1740	27 / 1620	24 / 1440
Max feed pressure	PSI (bar) MPa	101 / (7) / 0.7	101 / (7) / 0.7	101 / (7) / 0.7
Min feed pressure	PSI (bar) MPa	4.35 / (0.3) / 0.03	4.35 / (0.3) / 0.03	4.35 / (0.3) / 0.03
Inlet hose diameter (min.)	Inch / mm	3/4" / 19mm	3/4" / 19mm	3/4" / 19mm
Performance Data				
Working pressure	PSI (bar) MPal	4000 / (275) / 27.5	4060 / (280) / 28	5075 / (350) 35
Max excess operating pressure (safety valve)	PSI (bar) MPa	5075 / (350) 35	5075 / (350) 35	5650 (390) 39
Flow rate	l/m (l/h)	20 / 1200	26 / 1560	23 / 1380
Nozzle Size	Oriface	05	065	05
Type of protection	IP	IPX5	IPX5	IPX5
Oil				
Pump oil quantity/type	mL	1040 / SAE 15W-40	1040 / SAE 15W-40	1040 / SAE 15W-40
Gear oil quantity/type	mL	320 / Castrol Alpha SP220	320 / Castrol Alpha SP220	320 / Castrol Alpha SP220
Engine oil quantity/type	mL	1500 / 10W30	1500 / 10W30	1500 / 10W30
Dimensions & Weight				
Length x Width x Height	mm	875 x 550 x 870	875 x 550 x 870	875 x 550 x 870
Typical operating weight	kg	195	195	195
Values Determined as per AS/NZS 60335.2.79				
Max reaction/recoil force of trigger gun	N	77	100	121
Hand spray gun	m/s^2	-	-	-
Spray lance	m/s^2	-	-	-
Uncertainty K	m/s^2	-	-	-
Sound pressure level L_{pa}	dB(A)	91	91	91
Uncertainty K_{pa}	dB(A)	2	2	2
Sound Power Level L_{wa} + Uncertainty K_{wa}	dB(A)	107	107	107

Type		Scorpion G2FI 275-20	Scorpion G2FI 280-26	Scorpion G2FI 350-23	Scorpion G2FI 350-26
		HJ4000-20PHFI	HJ4000-26PHFI	HJ5000-23PHFI	HJ5000-26PHFI
Motor					
Honda Petrol Engine		iGX700, 2 cylinder, 4-stroke OHV	iGX700, 2 cylinder, 4-stroke OHV	iGX700, 2 cylinder, 4-stroke OHV	iGX800, 2 cylinder, 4-stroke OHV
Maximum torque at 3600rpm	kW/HP	16.5 / 22.1	16.5 / 22.1	16.5 / 22.1	18.6 / 24.9
Operating Speed	RPM	3200	3200	3200	3200
Fuel Tank	L	25	25	25	25
Fuel	Type	Petrol, unleaded	Petrol, unleaded	Petrol, unleaded	Petrol, unleaded
Battery	V / Ah / CCA	12 / 26 / 280	12 / 26 / 280	12 / 26 / 280	12 / 26 / 280
Water Connection					
Max feed temperature	°C / F	50 / 122	50 / 122	50 / 122	50 / 122
Min feed volume	l/m (l/h)	21 / 1740	27 / 1620	24 / 1440	27 / 1620
Max feed pressure	PSI (bar) MPa	101 / (7) / 0.7	101 / (7) / 0.7	101 / (7) / 0.7	101 / (7) / 0.7
Min feed pressure	PSI (bar) MPa	4.35 / (0.3) / 0.03	4.35 / (0.3) / 0.03	4.35 / (0.3) / 0.03	4.35 / (0.3) / 0.03
Inlet hose diameter (min.)	Inch / mm	3/4" / 19mm	3/4" / 19mm	3/4" / 19mm	3/4" / 19mm
Performance Data					
Working pressure	PSI (bar) MPa	4000 / (275) / 27.5	4060 / (280) / 28	5075 / (350) 35	5075 / (350) 35
Max excess operating pressure (safety valve)	PSI (bar) MPa	5075 / (350) 35	5075 / (350) 35	5650 (390) 39	5650 (390) 39
Flow rate	l/m (l/h)	20 / 1200	26 / 1560	23 / 1380	26 / 1560
Nozzle Size	Oriface	05	065	05	06
Type of protection	IP	IPX5	IPX5	IPX5	IPX5
Oil					
Pump oil quantity/type	mL	1040 / SAE 15W-40	1040 / SAE 15W-40	1040 / SAE 15W-40	1040 / SAE 15W-40
Gear oil quantity/type	mL	320 / Castrol Alpha SP220	320 / Castrol Alpha SP220	320 / Castrol Alpha SP220	320 / Castrol Alpha SP220
Engine oil quantity/type	mL	1500 / 10W30	1500 / 10W30	1500 / 10W30	1500 / 10W30
Dimensions & Weight					
Length x Width x Height	mm	875 x 550 x 870	875 x 550 x 870	875 x 550 x 870	875 x 550 x 870
Typical operating weight	kg	195	195	195	195
Values Determined as per AS/NZS 60335.2.79					
Max reaction/recoil force of trigger gun	N	77	100	121	126
Hand spray gun	m/s^2	-	-	-	
Spray lance	m/s^2	-	-	-	
Uncertainty K	m/s^2	-	-	-	
Sound pressure level L_{pa}	dB(A)	91	91	91	91
Uncertainty K_{pa}	dB(A)	2	2	2	2
Sound Power Level L_{wa} + Uncertainty K_{wa}	dB(A)	107	107	107	107

JX™ Petrol V-Twin JX750 Engine Maintenance Schedule

Always refer to the included manual for more in depth safety, maintenance and operation procedures of the engine.

Always use an approved Jetwave™ servicing agent who uses Genuine parts in order to ensure full 3 year warranty. Service records will need to be provided.

REGULAR SERVICE PERIOD[2] Perform at every indicated month or operating hour interval, whichever comes first. **ITEM**		Each Use	First Month or 20 Hrs	Every 3 months or 50 hours	Every 6 Months or 100 Hrs	Every Year or 300 Hrs
Engine Oil	Check Level	O				
	Change		O		O	
Oil Filter	Replace	Every Year or 200 Hrs				
Cooling Fin	Check/Clean	Every Year or 100 Hours[1]				
Air Filter	Check	O				
	Clean			O[1]		
	Replace					O[1]
Spark Plug	Check-Adjust				O	
	Replace					O
Spark arrester (applicable types)	Clean				O	
Idle Speed	Check-Adjust					O
Valve Clarence	Check-Adjust					O
Combustion Chamber	Clean	After Every 500 Hrs				
Fuel Filter	Check			O[1]		
	Replace				O[1]	
Fuel Tube	Check	Every 2 years (Replace if necessary)				

1. Service more frequently when used in dusty areas.
2. For commercial use, log hours of operation to determine proper maintenance intervals

Honda™ Petrol V-Twin GX690 Engine Maintenance Schedule

Based on the 'Maintenance Schedule' in the Honda™ Engine Manual, always refer to the included manual for more in depth safety, maintenance and operation procedures of the engine.

Always use an approved Honda™ servicing agent who uses Genuine Honda parts in order to ensure full 3 year GX Honda warranty. Service records will need to be provided.

REGULAR SERVICE PERIOD[2] Perform at every indicated month or operating hour interval, whichever comes first. **ITEM**		Each Use	First Month or 20 Hrs	Every 6 Months or 100 Hrs	Every Year or 300 Hrs	Every 2 Years or 500 Hrs
Engine Oil	Check Level	O				
	Change		O	O		
Engine Oil Filter	Replace	Every 200 Hrs				
Air Cleaner	Check	O				
	Clean			O[1]		
	Replace					O*
Spark Plug	Check-Adjust			O		
	Replace				O	
Spark arrester (applicable types)	Clean			O		
Idle Speed	Check-Adjust				O	
Valve Clarence	Check-Adjust				O	
Combustion Chamber	Clean	After Every 1000 Hrs				
Fuel Filter	Replace				O	
Fuel Tube	Check	Every 2 years (Replace if necessary)				

* Replace the paper filter element only.

1. Service more frequently when used in dusty areas.
2. For commercial use, log hours of operation to determine proper maintenance intervals

Honda™ Petrol V-Twin EFI iGX700 & iGX800 Engine Maintenance Schedule

Based on the 'Maintenance Schedule' in the Honda™ Engine Manual, always refer to the included manual for more in depth safety, maintenance and operation procedures of the engine.

Always use an approved Honda™ servicing agent who uses Genuine Honda parts in order to ensure full 3 year GX Honda warranty. Service records will need to be provided.

REGULAR SERVICE PERIOD[2] Perform at every indicated month or operating hour interval, whichever comes first. **ITEM**		Each Use	First Month or 20 Hrs	Every 6 Months or 100 Hrs	Every Year or 300 Hrs	Every 2 Years or 500 Hrs
Engine Oil	Check Level	O				
	Change		O	O		
Engine Oil Filter	Replace	Every 200 Hrs				
Air Cleaner	Check	O				
	Clean			O[1]		
	Replace					O*
Oil Cooler (applicable types)	Check	O[3]				
Spark Plug	Check-Adjust			O		
	Replace				O	
Spark arrester (applicable types)	Clean			O		
Valve Clarence	Check-Adjust				O	
Combustion Chamber	Clean	After Every 1000 Hrs				
Fuel Filter	Replace				O	
Fuel Tube	Check	Every 2 years (Replace if necessary)				

* Replace the paper filter element only.

1. Service more frequently when used in dusty areas.
2. For commercial use, log hours of operation to determine proper maintenance intervals.
3. If there are deposits of grass, trash, or other debris, clean regularly.

Jetwave™ High Pressure Cleaner & Water Jetting System Maintenance Schedule

Refer to the included manual for your high pressure cleaner or water jetting system for safety, pre-inspection, operation, shutdown and more procedures.

Always use an approved Jetwave™ servicing agent who uses Genuine Jetwave parts, to ensure full warranty coverage, service records will need to be provided.

REGULAR SERVICE PERIOD[1] Perform at every indicated month or operating hour interval, whichever comes first. **ITEM**		Each Use	First 25 Hrs or First Month	First 50 Hrs or First Month	Every 250 Hrs or 6 Months	Every 500 Hrs or 6 Months	Every 1000 Hrs or 1 Year
Pump Oil	Check Level	O					
	Change			O	O		
Reduction Gearbox	Check Oil Level			O	O		
	Replace				O		
Pump Conrods (Torque Spec: 25nM)	Re-tension			O			
Inlet Water Filter[2] (Check for build up of debris)	Check		O		O		
	Replace					O	
Hoses (Check for leaks)	Check	O			O		
Gun & Lance (Check for leaks)	Check	O					
	Replace						O
Fuel Tank Level	Check	O					
Unloader Valve (Check for leaks)	Check		O				
	Replace					O	
Safety Valve (Check setting and check for leaks)	Check		O			O	
	Replace						
Couplings & 0-Rings (If Leaking or as needed)	Check & Replace				O		
Pump Seal Kit[2] (If Leaking or down on pressure)	Replace					O	
Pump Valve Kit[2] (If down on pressure)	Replace					O	
Electrical Connections (Check for loose connections)	Check		O				
Battery (Check for loose connections)	Check				O		
	Replace	Replace as needed					

1. For commercial use, log hours of operation to determine proper maintenance intervals
2. Subject to water quality used.

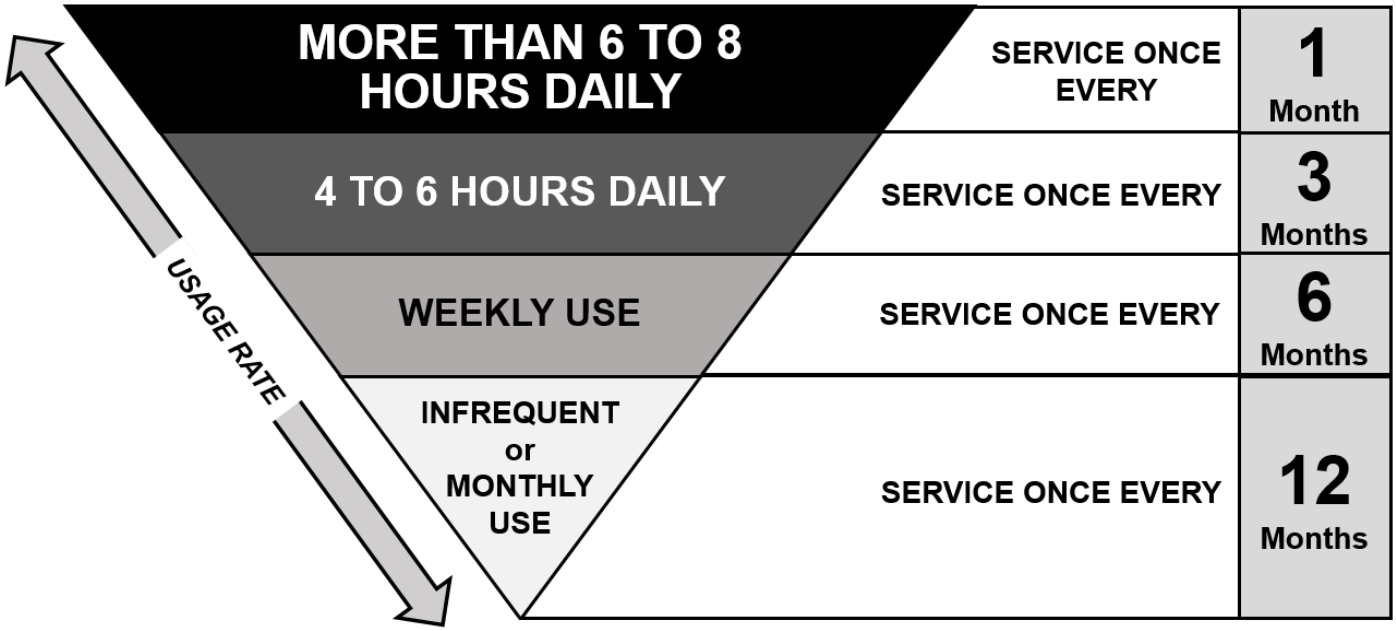

Time interval for checks and replacement listed above are for units subjected to normal operating conditions. Should the unit be subjected to abnormal conditions (eg heavy use, dirty water, extreme temperatures or conditions etc) times should be reduced accordingly.

Maintenance Log

Hour Meter Reading	Date	Maintenance Performed	Service Agent

Trouble Shooting

FAULT	CAUSE	SOLUTION
Pump runs normally but pressure does not achieve rated value.	Pump is sucking air. Valves are worn or dirty. Unloader valve packing worn. Nozzle incorrect or worn. Worn piston packing. Dirty inlet filter.	Check that all hoses and fittings are airtight. Check, clean or replace. Check and replace. Check and replace. Check and replace. Check and clean.
Fluctuating pressure.	Valves dirty, worn or stuck. Pump sucking air. Worn piston packing. Dirty filter.	Check, clean or replace. Check that all hoses and fittings are airtight. Check and replace. Check and clean.
Presence of water in oil.	High humidity in air. Piston packing or oil seal worn. Water entering through breather.	Check and change oil twice as often. Check and replace.
Water dripping from pump.	Piston packing worn. Piston guide o-rings worn.	Check and replace. Check and replace.
Dripping oil.	Worn oil seals. Oil coming out of breather.	Check and replace. Pump oil level overfull.
Motor does not start when switched on	Plug not well connected or unreliable power supply. Earth leakage overload.	Check plug, cable and switch. Check earth leakage.

If the unit will not generate the rated pressure or is erratic

- Make sure the engine throttle is properly adjusted to the full open position.
- Turn unloader valve clockwise to increase pressure. Do not force.
- Inspect system for leaks. Use caution during inspection to prevent injury. If leaks are found, shut unit OFF before fixing.
- Ensure the front part lance with nozzle is connected.
- Turn the unit OFF. Check the inlet hose and filter and make sure that they clear of debris.
- Make sure there is adequate water flow to the unit.
- Turn the unit OFF. Remove the nozzle and clean the orifices with the a nozzle cleaning tool.
- Ensure correct nozzle orifice size is used and no signs of excessive wear are evident.
- Activate trigger and run the unit to remove air or debris from the system. Turn the unit OFF before removing or attaching the lance/nozzle.
- Assume a proper operating position.
- Be sure you can control the ON/OFF action of a water control valve. In case of emergency you must be able to turn off water flow.
- Be sure that you have good balance and do not have to overreach.
- You must be able to place one hand on the gun at all times to control and support the lance.

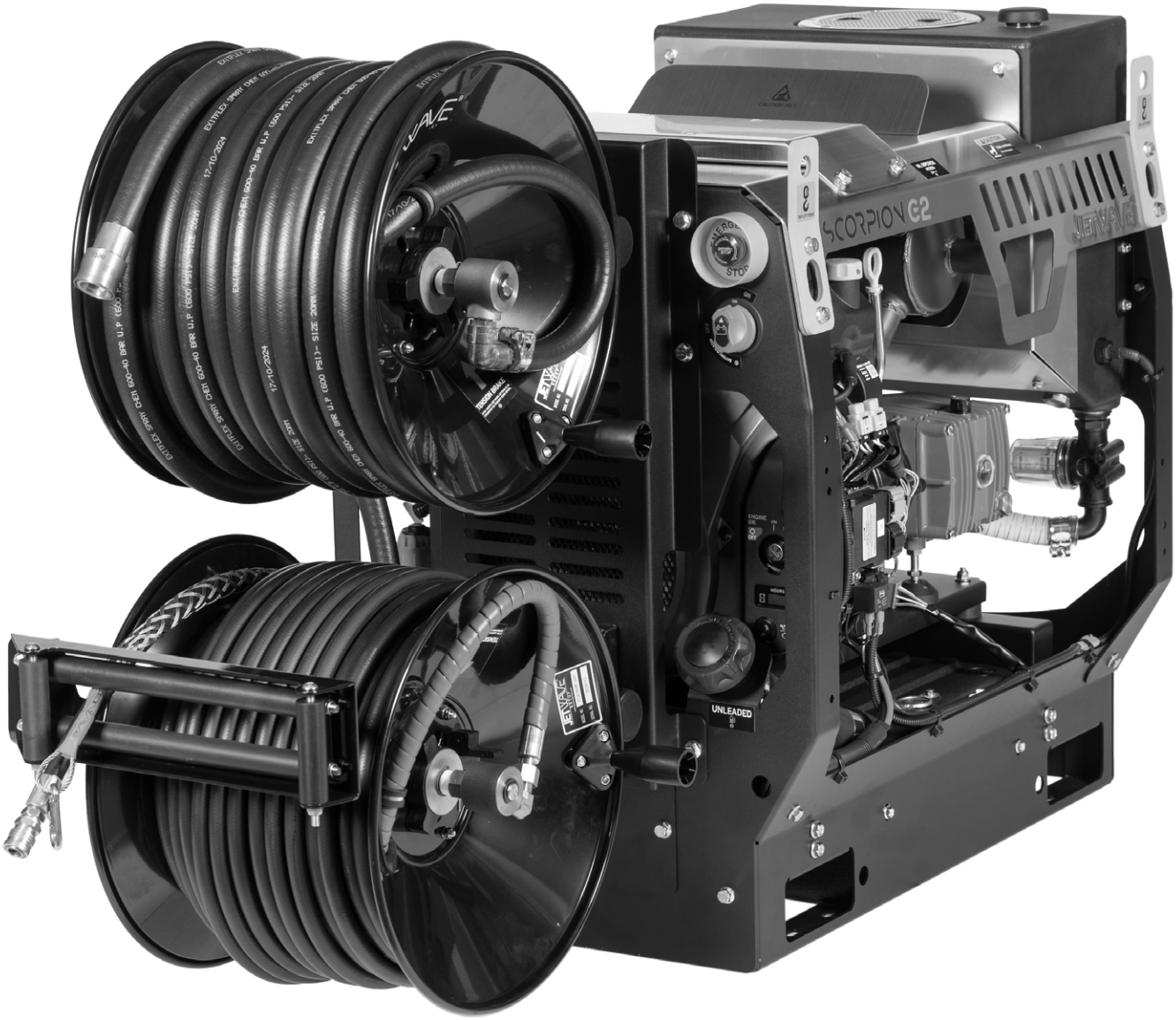

JETWAVE GROUP

10-16 Smith Street, Thebarton, 5031
Adelaide, South Australia, AU
+61 8 8371 3599
info@jetwavegroup.com
jetwavegroup.com

jetwavegroup jetwave.group jetwavegroup jetwavegroup jetwave-group

Copyright © 2026 Jetwave® Group Pty Ltd. All Rights Reserved.