JETWAVE® HIGH PRESSURE CLEANERS

RAPTOR™ G2 JNR

SEMI PROFESSIONAL
WEEKLY USAGE

3000	11	HONDA GX200	DIRECT	COLD WATER
200 BAR PSI	L/PM	PETROL ENGINE TYPE (POWERED by HONDA)	3400RPM DRIVE	OUTPUT



MADE IN AUSTRALIA

HERO INNOVATIONS

PEXO™
Stainless Steel Exoskeleton

TLL™
Top Lifting Lug

AFW™
Anti Flat Wheels

AVPS™
Anti Vibration Protection System

JWPP™
Jetwave™ AR® Premium Pump

Registered Design ® 202215871

APPLICATIONS

- Agriculturist
- Domestic Cleaning
- Light Work Tradesmen
- Light Work Commercial Cleaners

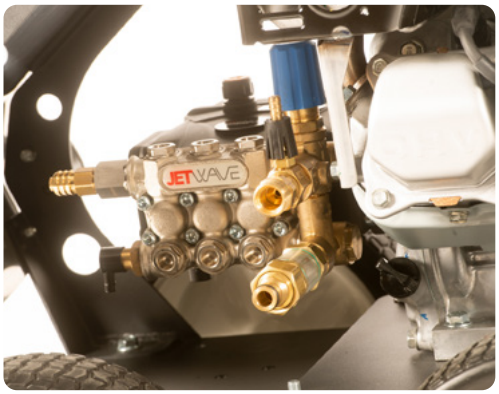

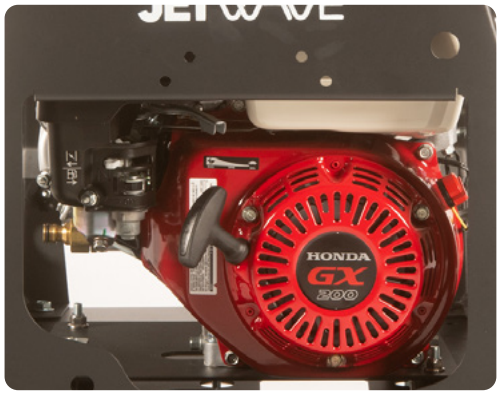

STANDOUT FEATURES

- **JW® Premium AR®** triplex pump delivers better performance and longevity.
- Industrial **Honda™ GX200** pull start series engine that delivers performance and reliability.
- **Jetwave Safety System™** (JSS) thermal and safety valve to prevent overheating in excessive bypass and over pressurisation.
- **Soft grip handle** ergonomic and compact.
- DIY **water filter** and **tie down points** for a secure transportation.
- **Tool free** dual M22 screw hose coupling system.

STANDARD EQUIPMENT



Gun/Lance: J5000™ High Pressure Gun w/swivel + lance w/variable pressure control.



Hose: 10m non marking double wire braid hose w/M22 couplings.



Chemical: In-line chemical downstream injector w/strainer.

DIMENSIONS (MM)

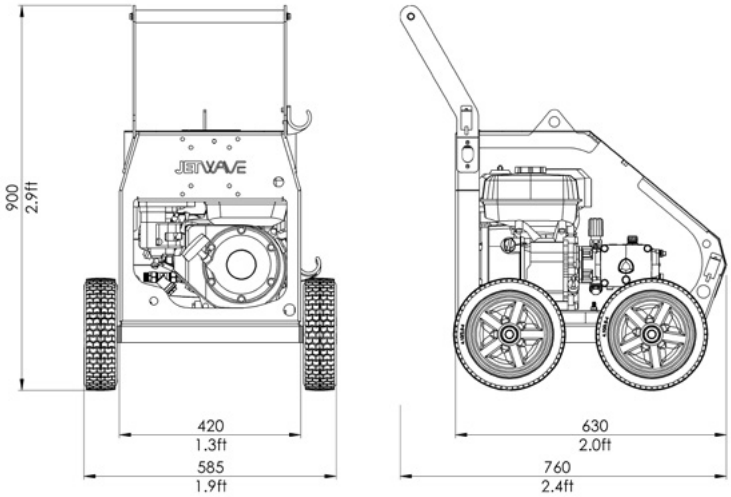

TECHNICAL DATA 0:00

RAPTOR™ G2 JNR

Product Code	CW3000-11PX-G2
Pressure / Flow Rate	**3000PSI** (200 BAR) / **11 L/PM** (660 L/PH) / **2.9 GPM**
Max Inlet Temp	60°C / 140°F
Class (AS/NZS: 4223)	A (2,200 Bar/Litres)
Usage Frequency	Semi Professional: Weekly
Nozzle Size	03
Frame Structure	CNC Modular galvanised steel chassis, plus satin powder coat finish and **stainless steel cover**

MOTOR FEATURES

Engine / Power	**Honda™ GX200** Pull Start (air cooled) 6.5HP / 200cc
Fuel Type / Capacity / Protection	**Unleaded** / 3.1L / Low Oil Shutdown

HYDRAULIC FEATURES

Pump / Head / Pistons	**JW® AR®** Triplex Plunger / Brass (Nickle Plated) / Ceramic
Motor Pump Coupling / Pump RPM	Direct Drive / 3400RPM
Unloader Valve	Banjo bolt on
Safety Valve	Yes
Detergent Injector	Yes - Downstream low pressure

DIMENSIONS & WEIGHT

Machine Dimensions / Weight	760mm(L) x 585mm(W) x 900mm(H) / 55KG

WARRANTY(S)

Unit / Pump Warranty*	2 Years
Engine Warranty*	3 Years

OPTIONAL ACCESSORIES

30m Hose Reel w/30m hose	1060CMPL-RAPJNR30M
JW3 Foaming Lance w/1L Tank	JWA221
Turbo Head w/Lance	JWA160.03
12" FSC - ABS Plastic	JWA-FSC12-CMPL

Copyright © 2024 Jetwave® Group Pty Ltd. All Rights Reserved.

The manufacturer reserves the right to modify design features and technical facts without notice, due to our principals of continuous improvement.

*Coverage against defects in material and workmanship (refer to Jetwave's and component partners T&Cs).

V4.0 07/24