JETWAVE® | HIGH PRESSURE CLEANERS

HYBRID™ G2 200-15

INDUSTRIAL
CONTINUOUS USAGE

3000	15	ELECTRIC MOTOR 5.5KW 3 PHASE	POWERLINK COUPLING	HOT WATER
PSI	L/PM	MOTOR TYPE	1450RPM DRIVE	OUTPUT



HERO INNOVATIONS

PEXO™
Stainless Steel Exoskeleton

JWPP™
Jetwave Italian Premium Pump

TSPS™
Total Stop Protection System

PL™
Powerlink Coupling to pump

APPLICATIONS

- Food & Beverage Cleaning
- Transportation & Logistics
- Agriculturist
- Factory Cleaning

One Product 4 Solutions





STANDOUT FEATURES

- **JW® Enhanced** Italian triplex plunger pump running at **1450RPM** delivers more performance and longer life.
- **JW® Low speed Italian made,** electric motor, with PowerLink™ coupling, air cooled and protected with thermal cut-out.
- **Vertical burner with flame detector cell photo eye,** added protection to the diesel fired burner.
- Premium **Unloader valve** with adjustable knob.
- Quality assured electrical control box & **emergency stop**.
- **Total Stop Protection System** for operational longevity.

STANDARD EQUIPMENT



Gun: *(SKU: J5500K)* J5500K LTF Spray Gun
Lance: *(SKU: JW-007-JB)* JW Single Lance with JetBlade nozzle socket
Nozzle: *(SKU: JB-25045)* 1 x JetBlade nozzle & JetBlade nozzle holder *(SKU: JB-NP)*
Hose: *(SKU: JWA018-SC-ASSY)* 10m DWB 3/8" Hose with m22 couplings
Storage: *(SKU: G2WASHCASE)* G2 Washcase

DIMENSIONS

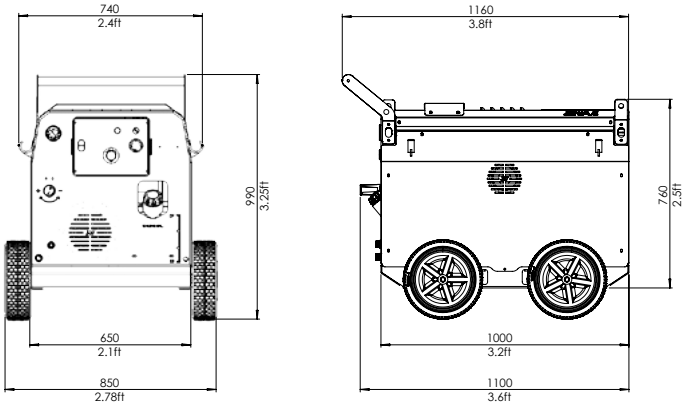

TECHNICAL DATA 0:00

HYBRID G2 200-15

Product Code	HW3000-15ELG2
Pressure / Flow Rate	**3000 PSI** (200 BAR) **/ 15 L/PM** (900 L/PH) **/ 4 GPM**
Max Water Inlet / Outlet Temp	50°C / 90°C
Class (ASNZS: 4223)	A (3,000 Bar/Litres)
Usage Frequency	Industrial: Continuous
Nozzle Size	045
Frame Structure	CNC Modular galvanised steel chassis plus satin powder coat finish and **stainless steel cover**

MOTOR FEATURES

Motor / Power	Induction / 5.5kW / 3 Phase / 415v / 50Hz
Cable Length / Control	**8M** / Delayed Timer Stop DTS™

HYDRAULIC FEATURES

Pump / Head / Pistons	**JW® Italian** Triplex Plunger / Brass (Nickle Plated) / Ceramic
Motor Pump Coupling / Pump RPM	PowerLink Coupling / 1450RPM
Unloader Valve	Independent - Adjustable
Safety Valve	Yes

THERMAL FEATURES

Burner Model	Vertical V Series
Fuel Supply / Capacity / Consumption	Diesel / 20L / 5.74 L/PH
Coil / Housing Material	Mild steel 3mm wall seamless (400BAR rated) / Stainless Steel

DIMENSIONS & WEIGHT

Machine Dimensions / Weight	Skid: 1100mm(L) x 650mm(W) x 760mm(H) / 250KG

WARRANTY(S)

Unit / Pump Warranty*	2 Years
Motor Warranty*	2 Years

OPTIONAL UPGRADES	SKU
JW® PRO RAPID 30M HOSE REEL FITTED WITH 30M HOSE	1060CMPL-HYB30M
JW® PRO RAPID 60M HOSE REEL FITTED WITH 60M HOSE	1067CMPL-HYB60M
JW® HOSE REEL ROLLER GUIDE (1067 ONLY)	1067-GUIDE-ASSY
JW® HYBRID G2 WALL MOUNT	90111G2-WALL
JW® HYBRID G2 FLOOR MOUNT	90111G2-STAND
JW® REMOTE CONTROL BOX 24V WITH 8M CABLE	JWA602
JW® HOUR METER	RQ48024VAC

OPTIONAL ACCESSORIES	SKU
JW® PRO TURBO HEAD	JWA303-045
JW® EASY FOAM BOTTLE KIT 1L	JWA731
JW® SINGLE BYPASS PRO FOAM COMPLETE KIT	PROFOAM-1.8
JW® DUAL BYPASS PRO FOAM COMPLETE KIT	PROFOAM2-1.8
JW® TWIN LANCE (WITH PRESSURE CONTROL)	JW54.2

Copyright © 2026 Jetwave® Group Pty Ltd. All Rights Reserved.
The manufacturer reserves the right to modify design features and technical facts without notice; due to our principals of continuous improvement.
*Coverage against defects in material and workmanship (refer to Jetwave's and component partners T&Cs).

V5.0 03/26