HYBRID™ G2 200-15

INDUSTRIAL CONTINUOUS USAGE

3000	15	ELECTRIC MOTOR 5.5KW 3 PHASE	POWERLINK COUPLING	HOT WATER
PSI	L/PM	MOTOR TYPE	1450RPM DRIVE	OUTPUT



HERO INNOVATIONS

PEXO™
Stainless Steel Exoskeleton

JWPP™
Jetwave Italian Premium Pump

TSPS™
Total Stop Protection System

BCT™
Bypass Cooling/Water Buffer Tank

PL™
Powerlink Coupling to pump

APPLICATIONS

- Food & Beverage Cleaning
- Transportation & Logistics
- Agriculturist
- Factory Cleaning

One Product 4 Solutions





STANDOUT FEATURES

- **JW® Enhanced** Italian triplex plunger pump running at **1450RPM** delivers more performance and longer life.
- **JW® Low speed Italian made**, electric motor, air cooled and protected with thermal cut-out.
- **Flame detector cell photo eye** added protection to diesel fired burner
- Seamless & sealed **12L on-board bypass water cooling tank** for added pump protection.
- Quality assured electrical control box & **emergency stop**.
- **Total Stop Protection System** for operational longevity.

STANDARD EQUIPMENT



Gun: J5500k low trigger force gun w/swivel & lance coupling system.



Lance: JW Straight stainless steel lance w/ JetBlade nozzle system



Hose: 10m non marking double wire braid hose w/M22 couplings



G2 Wash Case: Carrying and storage case.

DIMENSIONS

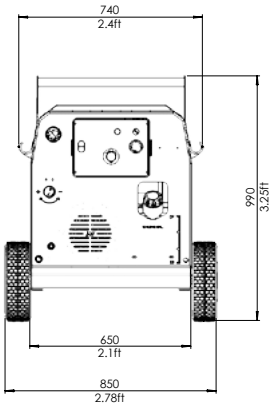

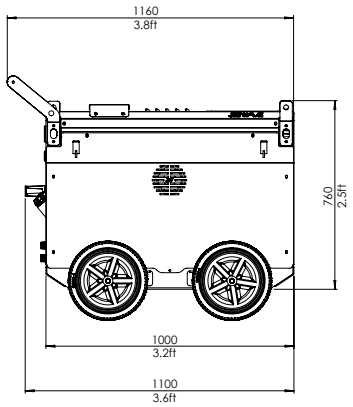

TECHNICAL DATA 0:00

HYBRID™ G2 200-15

Product Code	HW3000-15ELG2
Pressure / Flow Rate	**3000 PSI** (200 BAR) / **15 L/PM** (900 L/PH) / **4 GPM**
Max Water Inlet / Outlet Temp	50°C / 90°C
Class (ASNZS: 4223)	A (3,000 Bar/Litres)
Usage Frequency	Industrial: Continuous
Nozzle Size	045
Frame Structure	CNC Modular galvanised steel chassis plus satin powder coat finish and **stainless steel cover**

MOTOR FEATURES

Motor / Power	Induction / 5.5kW / 3 Phase / 415v / 50Hz
Cable Length / Control	**8M** / Delayed Timer Stop DTS™

HYDRAULIC FEATURES

Pump / Head / Pistons	**JW® Italian** Triplex Plunger / Brass (Nickle Plated) / Ceramic
Motor Pump Coupling / Pump RPM	PowerLink Coupling / 1450RPM
Unloader Valve	Independent - Adjustable
Safety Valve	Yes

THERMAL FEATURES

Burner Model	Vertical 12v
Fuel Supply / Capacity / Consumption	Diesel / 20L / 5.74 L/PH
Coil / Housing Material	Mild steel 3mm wall seamless (400BAR rated) / Stainless Steel

DIMENSIONS & WEIGHT

Machine Dimensions / Weight	Skid: 1100mm(L) x 650mm(W) x 760mm(H) / 195KG

WARRANTY(S)

Unit / Pump Warranty*	2 Years
Motor Warranty*	2 Years

OPTIONAL ACCESSORIES

30m Hose Reel w/30m hose	1060CMPL-HYG2
60m Hose Reel w/60m hose	1067CMPL-HYG2
60m Stainless Steel Hose Reel w/60m hose	1067CMPLSS-HYG2
Turbo Head w/Lance (300BAR)	JWA160
JW Bypass Pro Foam	PROFOAM

OPTIONAL UPGRADES

4 Wheel Trolley Kit	JWA407H
Wall Mount Kit	TBA XXX
Floor Mount Kit	TBA XXX
Hour Meter	RQ48024VAC

Copyright © 2025 Jetwave® Group Pty Ltd. All Rights Reserved.

The manufacturer reserves the right to modify design features and technical facts without notice, due to our principals of continuous improvement.

*Coverage against defects in material and workmanship (refer to Jetwave's and component partners T&Cs).

V5.0 03/25