JETWAVE® | HIGH PRESSURE CLEANERS

HORNET™ G2D 210-15

PROFESSIONAL
DAILY USAGE

3150	15	KOHLER KD15 - 440	GEARBOX	COLD WATER
210 BAR PSI	L/PM	DIESEL ENGINE TYPE (KOHLER Diesel)	1450RPM DRIVE	OUTPUT



MADE IN AUSTRALIA

HERO INNOVATIONS

PEXO™
Stainless Steel Exoskeleton

JWPP™
Jetwave Italian Premium Pump

CC™
Centralised Control

AVPS™
Anti Vibration Protection System

MC™
Multi Configuration

LEARN MORE



Hornet G2 Video

CE

UDOR WATER POWER

Registered Design ® 202215870

APPLICATIONS

- Tradesmen
- Construction/Earth Moving
- Mine Sites
- Hire & Rental

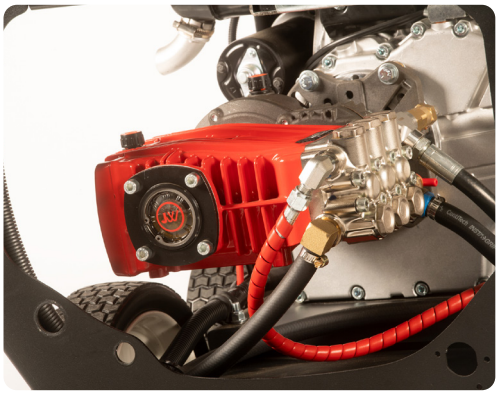



STANDOUT FEATURES

JW® UDOR® Premium Italian plunger pump running at 1450RPM, delivers more performance and longer life.

Industrial **Kohler™ KD15-440** series air cooled engine, with cyclonic air pre filter and twin fuel filtration for increased reliability.

Jetwave Safety System™ (JSS) thermal and safety valve to prevent overheating in excessive bypass and over pressurisation.

Zero line pressure brass adjustable unloader valve.

Battery isolator to prevent battery voltage loss, when not in use.

Emergency stop for increased operator safety.

STANDARD EQUIPMENT



Gun: J5500k low trigger force gun w/swivel & lance coupling system.

Lance: JW Straight stainless steel lance w/ snap coupling + nozzle w/protector & tail



Hose: 15m non marking double wire braid hose w/M22 couplings



Chemical: JW easy foam kit w/1L bottle



G2 WASHBOX VIDEO

DIMENSIONS (MM)

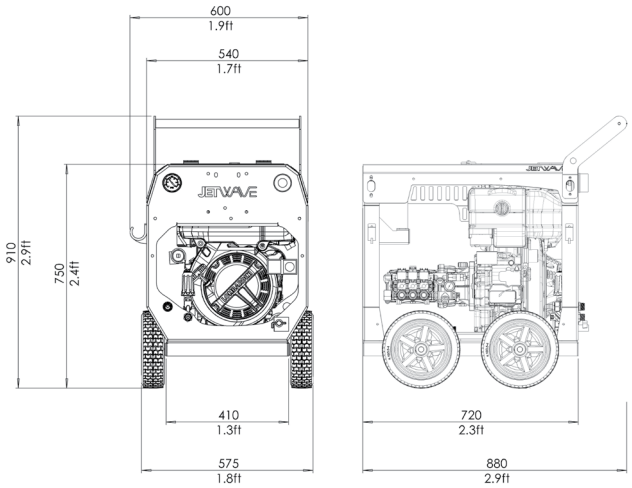

TECHNICAL DATA 0:00

HORNET G2D 210-15

Product Code	CW3000-15DG2
Pressure / Flow Rate	**3150** (210 BAR) / **15 L/PM** (900 L/PH) / **4 GPM**
Max Water Inlet Temp	60°C/ 140°F
Class (AS/NZS: 4223)	A (3,150 Bar/Litres)
Usage Frequency	Professional: Daily Usage
Nozzle Size	045
Frame Structure	CNC modular galvanised steel chassis plus satin powder coat finish and **stainless steel cover**

MOTOR FEATURES

Engine / Power	**Kohler™ KD15-440** Electric Key Start (air cooled) 10HP / 441cc
Fuel Type / Capacity / Protection	**Diesel** / 3.4L / Low Oil Shutdown

HYDRAULIC FEATURES

Pump / Head / Pistons	**JW® UDOR® Premium** Triplex Plunger / Brass (Nickle Plated) / Ceramic
Motor Pump Coupling / Pump RPM	**Gearbox Drive / 1450RPM**
Unloader Valve	Independent (Zero) - Adjustable (Panel Mounted)
Safety Valve	Yes

DIMENSIONS & WEIGHT

Machine Dimensions / Weight	880mm(L) x 575mm(W) x 910mm(H) / 102KG (approx.)

WARRANTY(S)

Unit / Pump Warranty*	2 Years
Engine Warranty*	KOHLER. Diesel 3 Years

OPTIONAL ACCESSORIES

30m Hose Reel	1060CMPL-HD30M
JW Pro Turbo Head	JWA303-045
21" Hammerhead FSC - Stainless Steel	JWA-FSC22-5.045

OPTIONAL UPGRADES

Engine Hour Meter	ACD-TACHO
Centre Balanced Top Lift Kit	JWA551-D
Forklift Pocket/Mounting Base	JWA-FLB
Mine Specification Kit	G2DMINESPEC-A

Copyright © 2023 Jetwave® Group Pty Ltd. All Rights Reserved.

The manufacturer reserves the right to modify design features and technical facts without notice; due to our principals of continuous improvement.
*Coverage against defects in material and workmanship (refer to Jetwave's and component partners T&Cs).

V3.0 08/23

JETWAVE GROUP

10-16 Smith Street, Thebarton, 5031, South Australia, AU +61 8 8371 3599 sales@jetwave.com.au jetwavegroup.com