JETWAVE® | HIGH PRESSURE CLEANERS

HORNET™ G2 QXE 200-21

PROFESSIONAL
DAILY USAGE

3000	21	HONDA GX390	GEARBOX	COLD WATER
200 BAR		PETROL	1450RPM	
PSI	L/PM	ENGINE TYPE	DRIVE	OUTPUT
		POWERED by HONDA		



MADE IN AUSTRALIA

HERO INNOVATIONS

PEXO™
Stainless Steel Exoskeleton

JWPP™
Jetwave Italian Premium Pump

CC™
Centralised Control

AVPS™
Anti Vibration Protection System

MC™
Multi Configuration

LEARN MORE



UDOR WATER POWER
Registered Design ® 202215870

APPLICATIONS

- Tradesmen
- Commercial & Exterior Cleaning
- Agriculturist
- Construction





STANDOUT FEATURES

JW® UDOR® Premium Italian plunger pump running at 1450RPM, delivers more performance and longer life.

Honda™ QXE GX390 Industrial Series Engine with with **electric key start** (back up pull start).

Jetwave Safety System™ (JSS) thermal and safety valve to prevent overheating in excessive bypass and over pressurisation.

Heavy duty JW Premium brass adjustable unloader valve. With flat spring design for longevity.

Battery isolator to prevent battery voltage loss, when not in use.

Emergency stop for increased operator safety.

G2 MORE FEATURES. MORE INNOVATION. MORE TECHNOLOGY.

JETWAVEGROUP.COM

STANDARD EQUIPMENT



Gun: J5500k low trigger force gun w/swivel & lance coupling system.

Lance: JW Straight stainless steel lance w/ snap coupling + nozzle w/protector & tail



Hose: 10m non marking double wire braid hose w/M22 couplings

DIMENSIONS (MM)

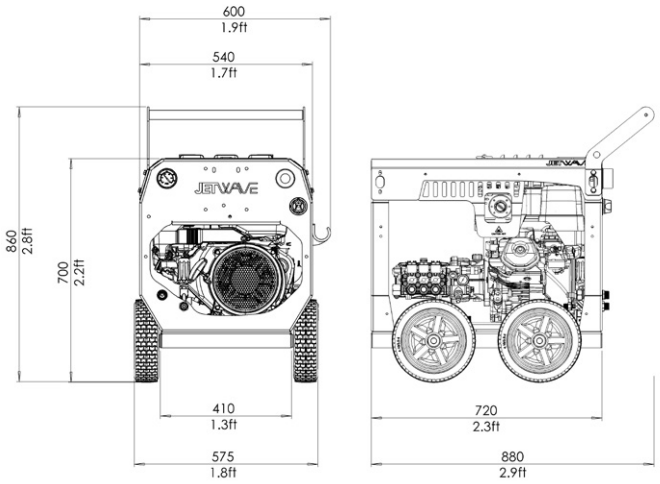

TECHNICAL DATA 0:00

HORNET G2 QXE 200-21

Product Code	CW3000-21PEG2
Pressure / Flow Rate	**3000 PSI** (200 BAR) / **21 L/PM** (1260 L/PH) / **5.5 GPM**
Max Water Inlet Temp	50°C/ 122°F
Class (AS/NZS: 4223)	A (4,200 Bar/Litres)
Usage Frequency	Professional: Daily
Nozzle Size	06
Frame Structure	CNC Modular galvanised sheet steel chassis plus satin powder coat finish and **stainless steel cover**

MOTOR FEATURES

Engine / Power	**Honda™ GX390 QXE** Electric Start (air cooled) 13HP / 390cc
Fuel Type / Capacity / Protection	**Unleaded** / 6.1L / Low Oil Shutdown

HYDRAULIC FEATURES

Pump / Head / Pistons	**JW® Italian** Triplex Plunger / Brass (Nickle Plated) / Ceramic
Motor Pump Coupling / Pump RPM	**Gearbox Drive / 1450RPM**
Unloader Valve	Independent - Adjustable (Panel Mounted)
Safety Valve	Yes

DIMENSIONS & WEIGHT

Machine Dimensions / Weight	880mm(L) x 575mm(W) x 860mm(H) / 90KG (approx.)

WARRANTY(S)

Unit / Pump Warranty*	2 Year(s)
Engine Warranty*	3 Year(s)

OPTIONAL ACCESSORIES

30m Hose Reel	1060CMPL-H30M
JW Pro Turbo Head	JWA303-06
21" Hammerhead FSC - Stainless Steel	JWA-FSC22-5.06
JW Easy Foam Kit	JW73.1

OPTIONAL UPGRADES

Wheel Brake System Kit	JWA-WBS
Engine Hour Meter	TACHHOUR8075

Copyright © 2024 Jetwave® Group Pty Ltd. All Rights Reserved.

The manufacturer reserves the right to modify design features and technical facts without notice, due to our principals of continuous improvement.
*Coverage against defects in material and workmanship (refer to Jetwave's and component partners T&Cs).

V4.0 07/24