JETWAVE® HIGH PRESSURE CLEANERS

# HORNET™ G2 280-15

PROFESSIONAL
DAILY USAGE

| 4060 | 15 | HONDA GX390 | GEARBOX | COLD WATER |
|---|---|---|---|---|
| 280 BAR | | PETROL | 1450RPM | |
| PSI | L/PM | ENGINE TYPE | DRIVE | OUTPUT |
| | | POWERED by HONDA | | |




## HERO INNOVATIONS

**PEXO™**
Stainless Steel Exoskeleton

**JWPP™**
Jetwave Italian Premium Pump

**CC™**
Centralised Control

**AVPS™**
Anti Vibration Protection System

**MC™**
Multi Configuration

LEARN MORE

UDOR WATER POWER

Registered Design ® 202215870

## APPLICATIONS

- Tradesmen
- Commercial & Exterior Cleaning
- Agriculturist
- Construction




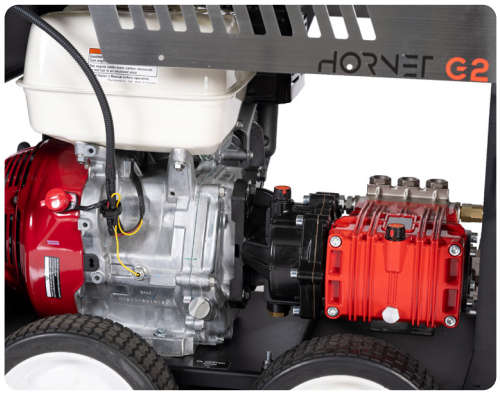


## STANDOUT FEATURES

**JW® UDOR® Premium** Italian plunger pump running at 1450RPM, delivers more performance and longer life.

Industrial **Honda™ GX390** pull start series engine that delivers performance and reliability.

**Jetwave Safety System™** (JSS) thermal and safety valve to prevent overheating in excessive bypass and over pressurisation.

**Heavy duty JW Premium** brass adjustable unloader valve. With flat spring design for longevity.

**Anti flat** all terrain wheels for reliable portability on site.

**Emergency stop** for increased operator safety.

G2 MORE FEATURES. MORE INNOVATION. MORE TECHNOLOGY.

JETWAVEGROUP.COM

## STANDARD EQUIPMENT




**Gun:** *(SKU: J5500K)* J5500K LTF Spray Gun
**Lance:** *(SKU: JW-007-JB)* JW Single Lance with JetBlade nozzle socket
**Nozzle:** *(SKU: JB-2504)* 1 x JetBlade nozzle & JetBlade nozzle holder *(SKU: JB-NP)*
**Hose:** *(SKU: JWA018-SC-ASSY)* 10m DWB 3/8" Hose with m22 couplings
**Storage:** *(SKU: G2WASHCASE)* G2 Washcase

## DIMENSIONS (MM)

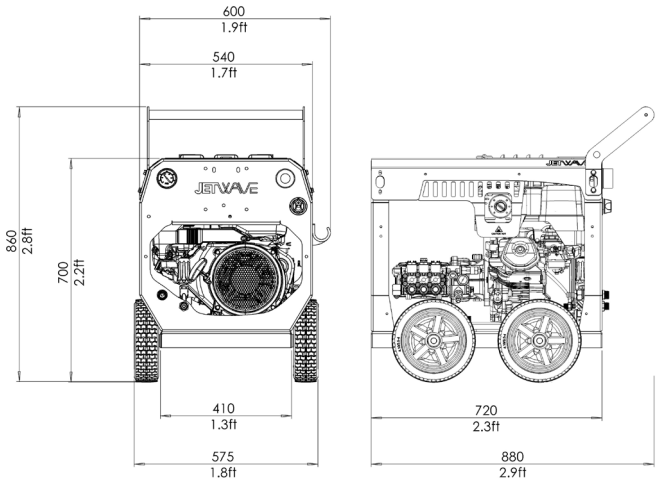


## TECHNICAL DATA 0:00

HORNET G2 280-15

| | |
|---|---|
| **Product Code** | CW4000-15PG2 |
| **Pressure / Flow Rate** | **4060PSI** (280 BAR) **/ 15 L/PM** (900 L/PH) / **4 GPM** |
| **Max Water Inlet Temp** | 50°C/ 122°F |
| **Class (AS/NZS: 4223)** | A (4,200 Bar/Litres) |
| **Usage Frequency** | Professional: Daily |
| **Nozzle Size** | 04 |
| **Frame Structure** | CNC Modular galvanised sheet steel chassis plus satin powder coat finish and **stainless steel cover** |

## MOTOR FEATURES

| | |
|---|---|
| **Engine / Power** | **Honda™ GX390** Pull Start (air cooled) 13HP / 390cc |
| **Fuel Type / Capacity / Protection** | **Unleaded** / 6.1L / Low Oil Shutdown |

## HYDRAULIC FEATURES

| | |
|---|---|
| **Pump / Head / Pistons** | **JW® UDOR® Premium** Triplex Plunger / Brass (Nickle Plated) / Ceramic |
| **Motor Pump Coupling / Pump RPM** | **Gearbox Drive / 1450RPM** |
| **Unloader Valve** | Independent - Adjustable (Panel Mounted) |
| **Safety Valve** | Yes |

## DIMENSIONS & WEIGHT

| | |
|---|---|
| **Machine Dimensions / Weight** | 880mm(L) x 575mm(W) x 860mm(H) / 86KG (approx.) |

## WARRANTY(S)

| | |
|---|---|
| **Unit / Pump Warranty*** | 2 Year(s) |
| **Engine Warranty*** | 3 Year(s) |

| OPTIONAL UPGRADES | SKU | OPTIONAL ACCESSORIES | SKU |
|---|---|---|---|
| JW® PRO RAPID 30M HOSE REEL FITTED WITH 30M HOSE | 1060CMPL-HOR30M | JW® PRO TURBO HEAD | JWA303-04 |
| JW® PRO RAPID 60M HOSE REEL FITTED WITH 60M HOSE | 1067CMPL-HOR60M | JW® SINGLE BYPASS PRO FOAM COMPLETE KIT | PROFOAM |
| JW® CONCRETER PACK UPGRADE | PACK-CON | JW® 21" FLAT SURFACE CLEANER - STAINLESS STEEL | JWA-FSC22-5 |
| JW® AGRICULTURE PACK UPGRADE | PACK-AG | JW® TWIN LANCE (WITH PRESSURE CONTROL) | JW54.2 |

Copyright © 2026 Jetwave® Group Pty Ltd. All Rights Reserved.
The manufacturer reserves the right to modify design features and technical facts without notice; due to our principals of continuous improvement.
*Coverage against defects in material and workmanship (refer to Jetwave's and component partners T&Cs).

V5.0 01/26