JETWAVE® | HIGH PRESSURE CLEANERS

# HORNET™ G2 280-15

PROFESSIONAL
DAILY USAGE

| 4060 | 15 | HONDA GX390 | GEARBOX | COLD WATER |
|---|---|---|---|---|
| 280 BAR | | PETROL | 1450RPM | |
| PSI | L/PM | ENGINE TYPE | DRIVE | OUTPUT |
| | | POWERED by HONDA | | |




MADE IN AUSTRALIA

## HERO INNOVATIONS

**PEXO™**
Stainless Steel Exoskeleton

**JWPP™**
Jetwave Italian Premium Pump

**CC™**
Centralised Control

**AVPS™**
Anti Vibration Protection System

**MC™**
Multi Configuration

LEARN MORE



UDOR WATER POWER

Registered Design ® 202215870

## APPLICATIONS

- Tradesmen
- Commercial & Exterior Cleaning
- Agriculturist
- Construction



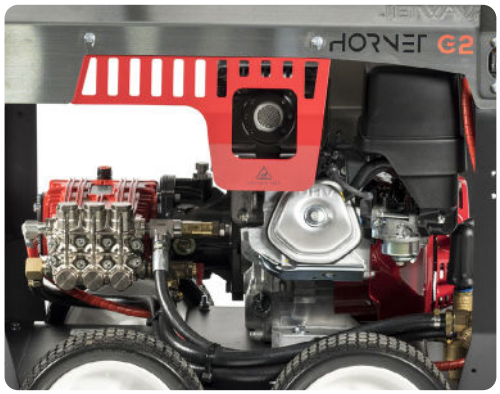


## STANDOUT FEATURES

**JW® UDOR® Premium** Italian plunger pump running at 1450RPM, delivers more performance and longer life.

Industrial **Honda™ GX390** pull start series engine that delivers performance and reliability.

**Jetwave Safety System™** (JSS) thermal and safety valve to prevent overheating in excessive bypass and over pressurisation.

**Zero line pressure** brass adjustable unloader valve.

**Anti flat** all terrain wheels for reliable portability on site.

**Emergency stop** for increased operator safety.

## STANDARD EQUIPMENT



**Gun:** J5500k low trigger force gun w/swivel & lance coupling system.

**Lance:** JW Straight stainless steel lance w/ snap coupling + nozzle w/protector & tail



**Hose:** 15m non marking double wire braid hose w/M22 couplings



**Chemical:** JW easy foam kit w/1L bottle



G2 WASHBOX VIDEO

## DIMENSIONS (MM)

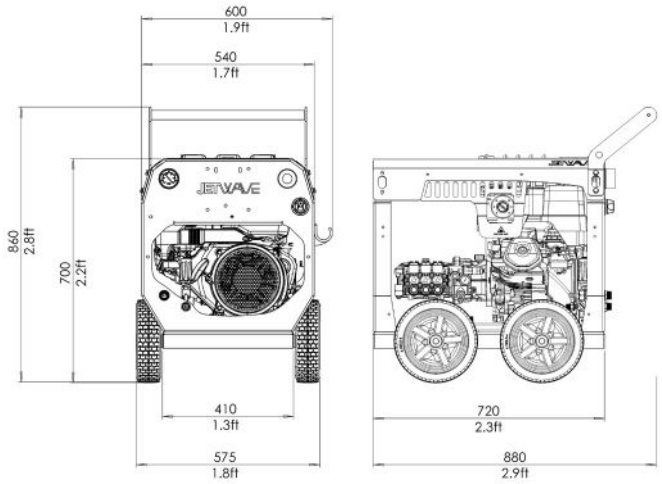


| TECHNICAL DATA 0:00 | HORNET G2 280-15 |
|---|---|
| Product Code | CW4000-15PG2 |
| Pressure / Flow Rate | **4060PSI** (280 BAR) / **15 L/PM** (900 L/PH) / **4 GPM** |
| Max Water Inlet Temp | 60°C/ 140°F |
| Class (AS/NZS: 4223) | A (4,200 Bar/Litres) |
| Usage Frequency | Professional: Daily |
| Nozzle Size | 04 |
| Frame Structure | CNC Modular galvanised sheet steel chassis plus satin powder coat finish and **stainless steel cover** |

| MOTOR FEATURES | |
|---|---|
| Engine / Power | **Honda™ GX390** Pull Start (air cooled) 13HP / 390cc |
| Fuel Type / Capacity / Protection | **Unleaded** / 6.1L / Low Oil Shutdown |

| HYDRAULIC FEATURES | |
|---|---|
| Pump / Head / Pistons | **JW® UDOR® Premium** Triplex Plunger / Brass (Nickle Plated) / Ceramic |
| Motor Pump Coupling / Pump RPM | **Gearbox Drive / 1450RPM** |
| Unloader Valve | Independent (Zero) - Adjustable (Panel Mounted) |
| Safety Valve | Yes |

| DIMENSIONS & WEIGHT | |
|---|---|
| Machine Dimensions / Weight | 880mm(L) x 575mm(W) x 860mm(H) / 86KG (approx.) |

| WARRANTY(S) | |
|---|---|
| Unit / Pump Warranty* | 2 Year(s) |
| Engine Warranty* | 3 Year(s) |

| OPTIONAL ACCESSORIES | | OPTIONAL UPGRADES | |
|---|---|---|---|
| 30m Hose Reel | 1060CMPL-H30M | **Wheel Brake System Kit** | JWA-WBS |
| JW Pro Turbo Head | JWA303-04 | **Engine Hour Meter** | TACHHOUR8075 |
| 21" Hammerhead FSC - Stainless Steel | JWA-FSC22-5.04 | | |

**Copyright © 2023 Jetwave® Group Pty Ltd. All Rights Reserved.**

The manufacturer reserves the right to modify design features and technical facts without notice; due to our principals of continuous improvement.
*Coverage against defects in material and workmanship (refer to Jetwave's and component partners T&Cs).

*V3.0 08/23*

JETWAVE GROUP

10-16 Smith Street, Thebarton, 5031, South Australia, AU +61 8 8371 3599 sales@jetwave.com.au jetwavegroup.com