JETWAVE® | HIGH PRESSURE CLEANERS

HORNET™ G2 280-15

PROFESSIONAL
DAILY USAGE

4060	15	HONDA GX390	GEARBOX	COLD WATER
280 BAR		PETROL	1450RPM	
PSI	L/PM	ENGINE TYPE	DRIVE	OUTPUT
		POWERED by HONDA		



MADE IN AUSTRALIA

HERO INNOVATIONS

PEXO™
Stainless Steel Exoskeleton

JWPP™
Jetwave Italian Premium Pump

CC™
Centralised Control

AVPS™
Anti Vibration Protection System

MC™
Multi Configuration

LEARN MORE



UDOR WATER POWER

Registered Design ® 202215870

APPLICATIONS

- Tradesmen
- Commercial & Exterior Cleaning
- Agriculturist
- Construction



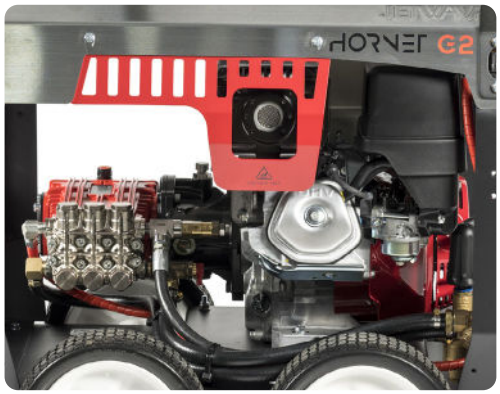

STANDOUT FEATURES

JW® UDOR® Premium Italian plunger pump running at 1450RPM, delivers more performance and longer life.

Industrial **Honda™ GX390** pull start series engine that delivers performance and reliability.

Jetwave Safety System™ (JSS) thermal and safety valve to prevent overheating in excessive bypass and over pressurisation.

Zero line pressure brass adjustable unloader valve.

Anti flat all terrain wheels for reliable portability on site.

Emergency stop for increased operator safety.

STANDARD EQUIPMENT



Gun: J5500k low trigger force gun w/swivel & lance coupling system.

Lance: JW Straight stainless steel lance w/ snap coupling + nozzle w/protector & tail



Hose: 15m non marking double wire braid hose w/M22 couplings



Chemical: JW easy foam kit w/1L bottle



G2 WASHBOX VIDEO

DIMENSIONS (MM)

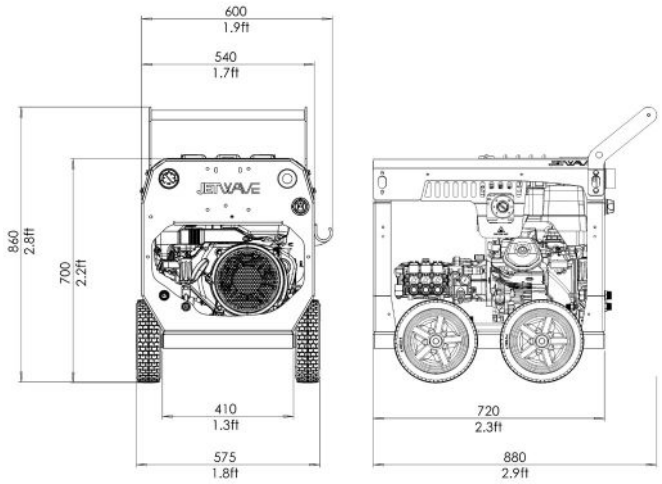

TECHNICAL DATA 0:00	HORNET G2 280-15
Product Code	CW4000-15PG2
Pressure / Flow Rate	**4060PSI** (280 BAR) / **15 L/PM** (900 L/PH) / **4 GPM**
Max Water Inlet Temp	60°C/ 140°F
Class (AS/NZS: 4223)	A (4,200 Bar/Litres)
Usage Frequency	Professional: Daily
Nozzle Size	04
Frame Structure	CNC Modular galvanised sheet steel chassis plus satin powder coat finish and **stainless steel cover**

MOTOR FEATURES	
Engine / Power	**Honda™ GX390** Pull Start (air cooled) 13HP / 390cc
Fuel Type / Capacity / Protection	**Unleaded** / 6.1L / Low Oil Shutdown

HYDRAULIC FEATURES	
Pump / Head / Pistons	**JW® UDOR® Premium** Triplex Plunger / Brass (Nickle Plated) / Ceramic
Motor Pump Coupling / Pump RPM	**Gearbox Drive / 1450RPM**
Unloader Valve	Independent (Zero) - Adjustable (Panel Mounted)
Safety Valve	Yes

DIMENSIONS & WEIGHT	
Machine Dimensions / Weight	880mm(L) x 575mm(W) x 860mm(H) / 86KG (approx.)

WARRANTY(S)	
Unit / Pump Warranty*	2 Year(s)
Engine Warranty*	3 Year(s)

OPTIONAL ACCESSORIES		OPTIONAL UPGRADES	
30m Hose Reel	1060CMPL-H30M	**Wheel Brake System Kit**	JWA-WBS
JW Pro Turbo Head	JWA303-04	**Engine Hour Meter**	TACHHOUR8075
21" Hammerhead FSC - Stainless Steel	JWA-FSC22-5.04		

Copyright © 2023 Jetwave® Group Pty Ltd. All Rights Reserved.

The manufacturer reserves the right to modify design features and technical facts without notice; due to our principals of continuous improvement.
*Coverage against defects in material and workmanship (refer to Jetwave's and component partners T&Cs).

V3.0 08/23

JETWAVE GROUP

10-16 Smith Street, Thebarton, 5031, South Australia, AU +61 8 8371 3599 sales@jetwave.com.au jetwavegroup.com