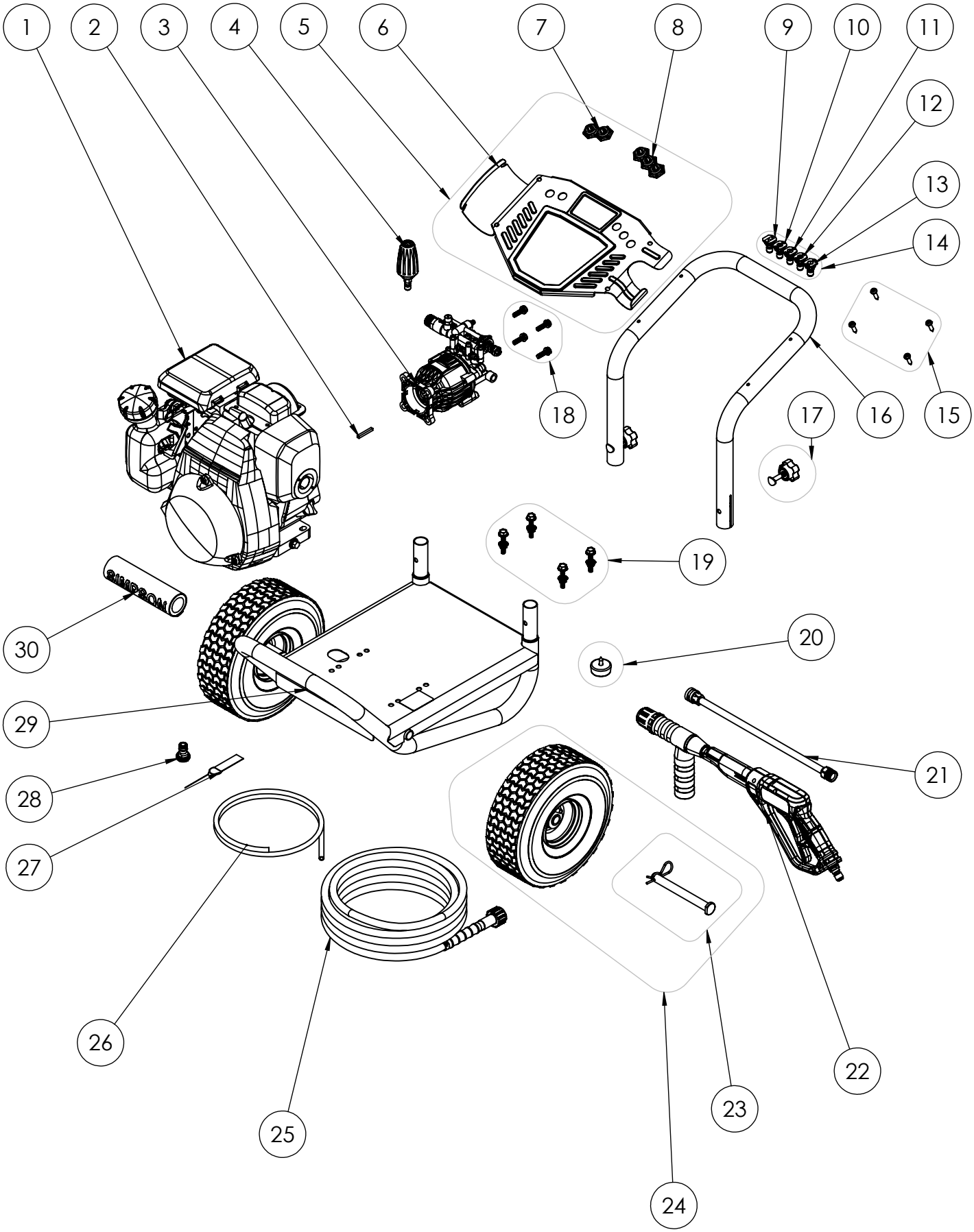

MODEL: 60966 JW3300HC REV.

Version:

ITEM NO.	PART NUMBER	DESCRIPTION	QTY.
1	109988	ENGINE 187CC 49 STATE 3700 WATTS RED	1
2	7101506	KEY, SHAFT 3/16 X 3/16 X 1-1/2	1
3	520002	PUMP, 52BR24	1
4	7109528	3700psi TURBO NOZZLE, BULK	1
5	71180145	60966 DASHBOARD ASY KIT	1
6	7108142	DASHBOARD ASSEMBLY, 11.75" C-C BLACK	1
7	7107067	HOLDER, NOZZLE 2PC RUBBER STRIP	1
8	7107068	HOLDER, NOZZLE 3PC RUBBER STRIP	1
9	7106327	NOZZLE, PLASTIC SOAP 1/4 QC-M	1
10	7200491	NOZZLE 3.0x40° WHITE 1/4"	1
11	7200490	NOZZLE, 3.0x0° RED 1/4"	1
12	7200389	NOZZLE 3.0x25° GREEN 1/4"	1
13	7115716	NOZZLE 2.6x0° RED 1/4"	1
14	7109300	5PC NOZZLE 1PC 2.6-0,3.0-15,25,40,PSOAP	1
15	7117740	MOUNTING SCRE SVC ASY KIT	1
16	7109221	HANDLE, BLACK 11.75" C-C	1
17	7117721	KNOB-BOLT KIT	2
18	7103745	PUMP MOUNTING HARDWARE KIT	1
19	7102340	ENGINE MOUNTING HARDWARE KIT	1
20	7103292	KIT, FOOT SVC ASY	2
21	7103550	LANCE, 16" W/ 1/4 QC AND M22(M)	1
22	7114860AAA	GUN, REAR ENTRY, 4500 PSI, QC, AAA	1
23	7117725	AXLE, COTTER PIN SET	2
24	7103619	PRESSURE WASHER WHEEL ASY 4x10, BLK	2
25	7107963	HOSE, 3/8" X 25' X 4500PSI PU HW M22XM22	1
26	7112998	HOSE, SOAP CLEAR	1
27	7102045	TOOL, NOZZLE CLEANING, UNIVERSAL	1
28	7112410	3/4NH-M X GHQC-M FITTING	1
29	7116697	FRAME ASSY, PS SM HOR, BK1, SIMPSON PAD	1
30	7105186	GRIP, SLV	1