Operating and Maintenance Instructions

515 Wet and Dry
Industrial Vacuum Cleaner



WARRANTY

This JETWAVE product is guaranteed against faults in manufacture for 12 months from purchase. Keep your receipt as proof of purchase.

This warranty is invalid if the product has been found to have been abused in any way, or not used for the purpose for which it was intended.

Where possible return faulty goods to the place of purchase.
No products can be returned to us without our prior permission. The reason for return must be clearly stated.

This warranty does not affect your statutory rights.

Before preceding with assembly of your new JETWAVE 515 PVC Vacuum Cleaner, check that all the parts listed below are included:

1 x JETWAVE 515 Vacuum Cleaner
- Vacuum Hose with fittings
- Black Poles (1 Pair)
- Quality wet floor tool
- Quality dry floor tool
- Crevice tool
- Round Dusting brush
- Reducing Socket
- Curved Handle

This machine is suitable to pick up dust and /or liquids. It is also sturdy, powerful and simple to use. The kit is used for efficient, fast and compete cleaning of home, office, shop, laboratories etc.

- Do not use the cable coiled as this could result in a voltage drop or overheating. Keep dry at all times.
- The equipment should not be used to pick up water from containers.
- Ensure that the float pos. D. Is not damaged or obstructed by anything that may stop it from rising. The float function is to stop the suction when the tank is full or if the machine should overturn.
- If the equipment should overturn, it is recommended that the machine should be stood up before switching off.
- If foam/liquid should come from the machine exhaust switch off immediately.
- Aggressive solvents or detergents should not be used
- Service and repairs must be carried out by qualified personnel only.
- Replacement parts for the machine must be manufacturers original spare parts only.
- The manufacturer cannot be held responsible for any damage/injury caused to persons or property, because of the incorrect use of the machine due to procedures being used, which are not specified in this instruction manual.

INSTRUCTIONS TO BE STRICTLY FOLLOWED

- Components used in packaging (i.e. plastic bags) can be dangerous, keep away from children and animals.
- The use of this machine for anything not specified in this manual may be dangerous and must be avoided.
- The suction nozzle should be kept away from the body, especially delicate areas such as the eyes, ears and mouth.
- The equipment should be correctly assembled before use.
- Ensure the power sockets used are correct for the machine.
- Check the voltage indicated on the rating plate is the same as the supply voltage.
- These machines are not designed for picking up health endangering dust or inflammable/explosive substances.
- Never leave the equipment unattended whilst in use.
- Never carry out any maintenance on the machine without first disconnecting from the mains, if the machine is to be left unattended or can be reached by children or other persons not aware about their action, the supply should be terminated.
- The main supply cable should not be used to pull or lift the machine.
- The machine should never be immersed in water or a pressure jet of water used for cleaning.
- Periodically examine the mains cable and machine for damage. If any damage is found contact your local JETWAVE service centre for repair

PLEASE NOTE:
In order to keep the machine in good condition, it is useful to clean the polyester filter after each utilisation.

DRY SUCTION/ OPERATING INSTRUCTIONS

- Insert the cloth filter in the tank
- Assemble the head in the tank and attach block by hooks
- Connect the flexible hose to the inlet
- Connect the wand and the extensions to the other side of flexible hose
- Select and connect the most suitable accessory
- Connect the plug to power socket then switch on the equipment

LIQUID SUCTION/OPERATING INSTRUCTIONS

- Remove the cloth filter bag
- Assemble the head on tank and attach block by hooks
- Connect the flexible hose to the inlet
- Connect the wand and the extensions to the other side of flexible hose
- Connect the wet tool
- Connect the plug to power socket then switch on the equipment

PARTS BREAKDOWN

515 Head

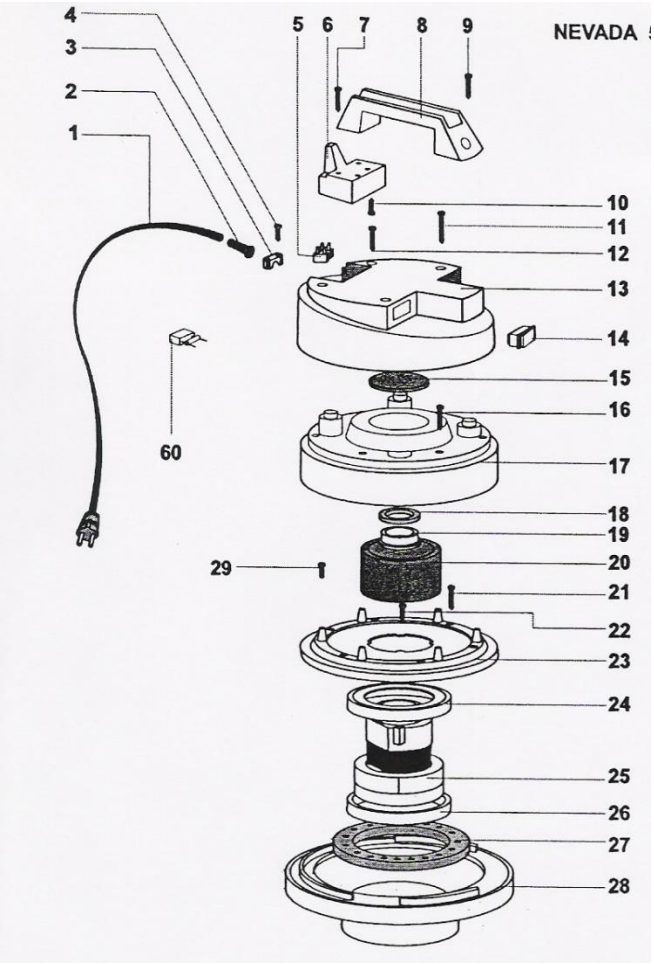

POS.	CODE	DESCRIPTION	N°
1	117	POWER CABLE	1
2	138	POWER CABLE GROMET	1
3	139	POWER CABLE RETAINING CLIP	1
4	1006	SCREW 5 x 20 ZINC	2
5	450	TERMINAL BLOCK	1
6	2928	ELECTRIC BOX	1
7	2627	SCREW 5 x 40 ZINC	2
8	2927	HANDLE	1
9	1026	SCREW 5 x 30 Zinc	1
10	1006	SCREW 5 x 20 Zinc	2
11	1054	SCREW 5 x 50 Zinc	2
12	1026	SCREW 5 x 30 Zinc	2
13	2929	TOP COVER BLACK	1
14	326	SWITCH ON/OFF	1
15	3937	FILTER	1
16	1050	SCREW 5 x 35 ZINC	6
17	2738	MIDDLE COVER RED	1
18	3969	FILTER	1
19	310	PLASTIC RING MOTOR	1
20	3900	FILTER	1
21	2627	SCREW 5 x 40 Zinc	6
22	1006	SCREW 5 x 20 Zinc	4
23	2591	MOTOR TOP SUPPORT	1
24	3901	BOTTOM RUBBER MOTOR PACKING	1
25	3891 S	MOTOR 1000W 200-240V 50/60	1
26	3901	BOTTOM RUBBER MOTOR PACKING	1
27	3866	FOAM PACKING RING	1
28	1189 GP	MOTOR SUPPORT BASE	1
29	3189	SCREW M5X30	1
*	1101		2
*	1106		1
*	1107		1
	1103		2
		RAD	
60	3658	RESISTOR	1

Filter Kit

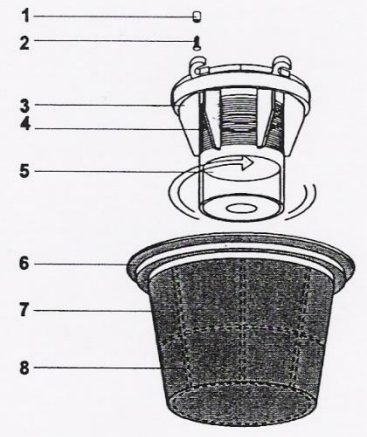

POS.	CODE	DESCRIPTION	N°
1	3706	PLASTIC BUSH	4
2	3724	SCREW 5X25	4
3	2823	FLOAT VALVE CAGE	1
4	3138	NET FILTER	1
5	2676	FLOATER	1
6	507	FILTER RING	1
7	2860	CLOTH FILTER	1
8	2859	FILTER CAGE	1

Body

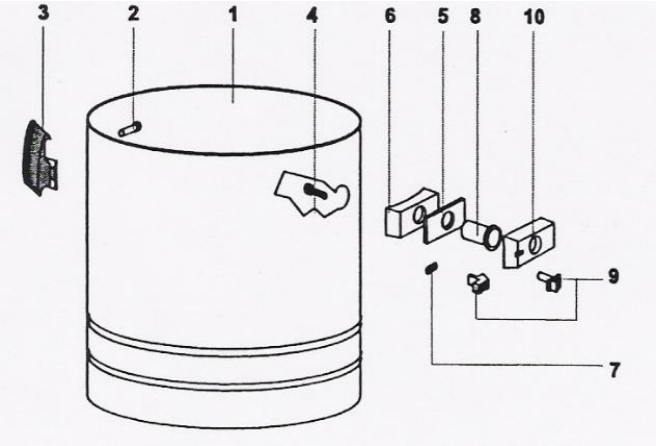

POS.	CODE	DESCRIPTION	N°
1	2665	TANK 515	1
2	1301	RIVET 5X11	4
3	1847	PLASTIC HANDLE	2
4	1026	SCREW 5X30 ZINC	4
5	2846	INLET SPACER	1
6	2585	PACKING	1
7	2608	SPRING	1
8	2593	DEFLECTOR	1
9	2594	RETAINING CLIP	1
10	2583	INLET OUTER COVER	1

Base

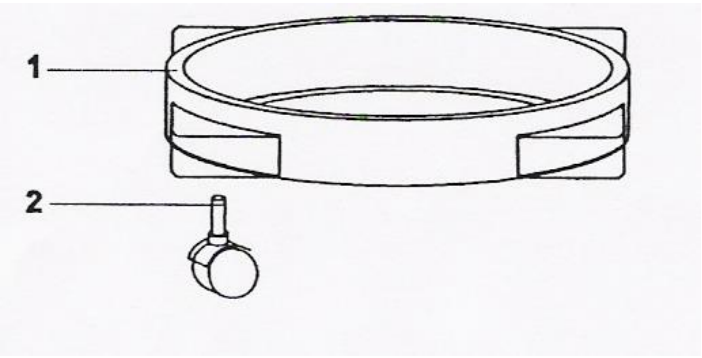

POS.	CODE	DESCRIPTION	N°
1	1218	TROLLEY BASE	1
2	558	WHEEL	4

JETWAVE®

KIT REF. 2675

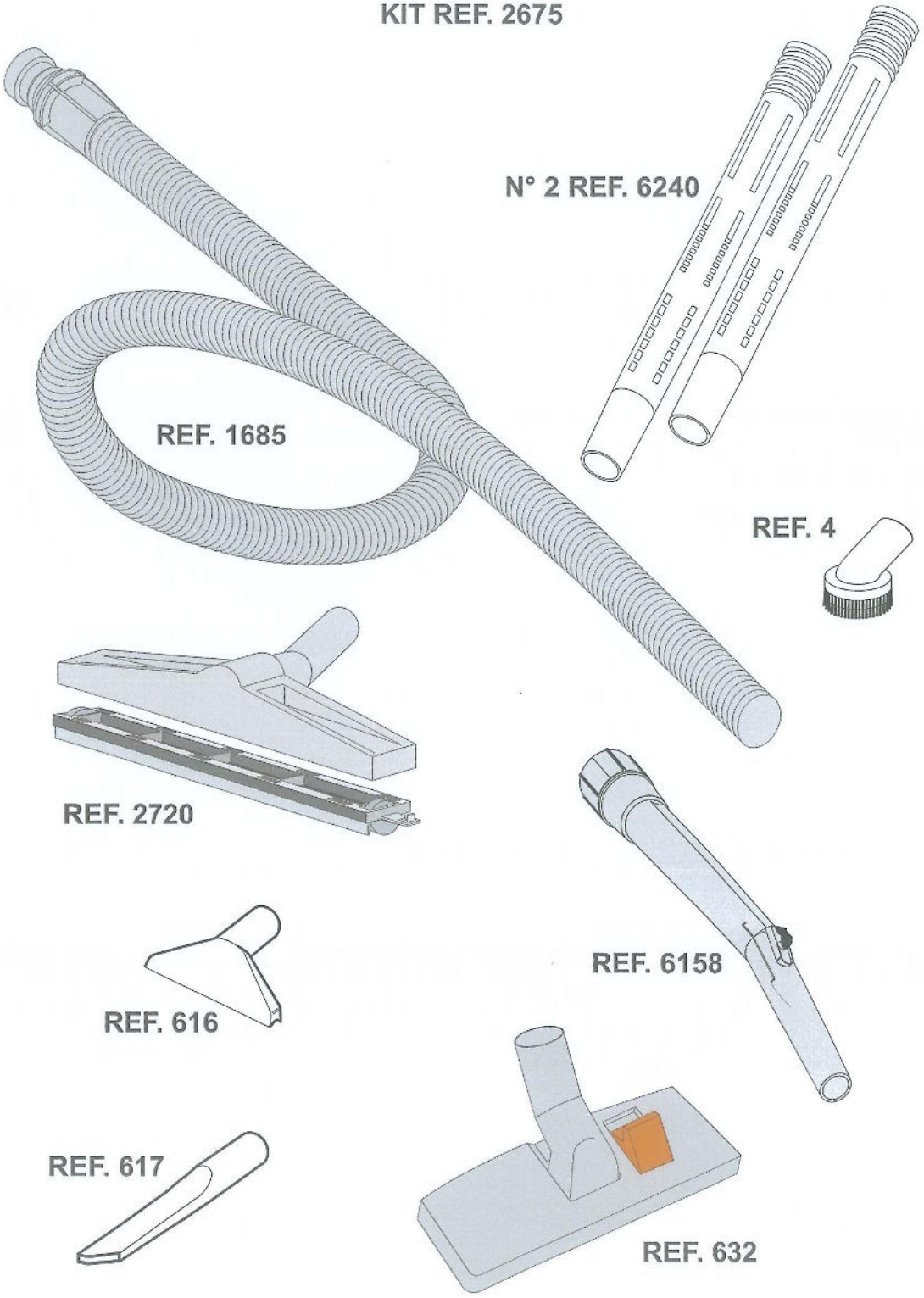

IMPORTANT OPERATING INSTRUCTIONS
WET/DRY VACUUM CLEANER

- Due the potential for a loss of voltage to the motors, use of an extension power cord with the machine is not recommended.
- It is recommended that each motor be started individually.
- Ensure that the filter bag is removed when using wet application.
- Should the machine lose suction in wet/dry operation then shut down the machine immediately and empty the recovery tank.
- At the end of operation, clean the cloth filter (dry operation only) and ensure that the filter float valve on the vacuum head is clean and free of residue.
- Never use the equipment near flammable, explosive, or, toxic substances.

For further information please contact

Head Office

Jetwave Group Pty Ltd
72-74 Richmond Road
Keswick, SA, 5035

Telephone: +61 8 8371 3599
Facsimile: +61 8 8371 4497

Website : www.jetwave.com.au

Email : sales@jetwave.com.au