JETWAVE® WATER JETTING SYSTEMS

HURRICANE™ G2 350-36

5080 PSI	36.4 L/PM	V-TWIN EFI 37HP PETROL ENGINE TYPE	GEARBOX 1450RPM DRIVE	COLD WATER OUTPUT

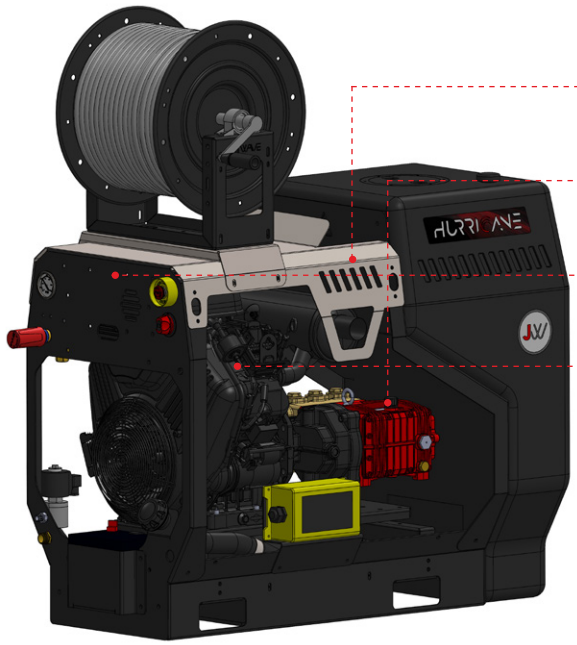

HERO INNOVATIONS

PEXO™
Stainless Steel Exoskeleton

JWPP™
Jetwave Italian Premium Pump

CC™
Centralised Control

EFI™
Electronic Fuel Injection Technology

AST™
Auto Speed Technology

JW REMOTE™
JW Remote Control System up to 400m

MADE IN AUSTRALIA

APPLICATIONS

- Plumbers
- Council & Municipality
- Drain Cleaning
- Water Authorities

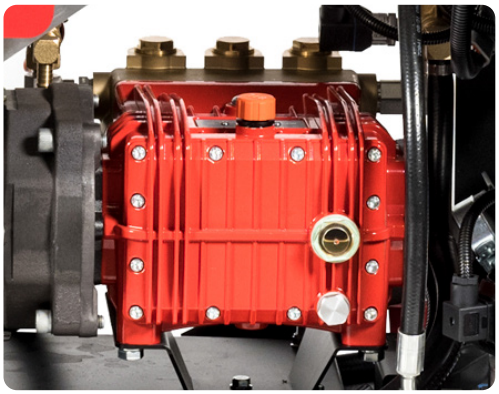



NEW REMOTE SYSTEM

STANDOUT FEATURES

JW® Enhanced Italian triplex plunger pump running at 1450RPM delivers more performance and longer life.

Electric start Industrial V-Twin **Vanguard™ Big Block EFI 37HP** Series Engine with electronic fuel injection and auto RPM'S.

Seamless under chassis mounted 25L fuel tank (w/level gauge) protected from heat with front fill point safety.

150L on-board water bypass tank with low level cut out.

JW Remote™ allows operators to remotely control machine **on/off** and **open/close** the high pressure outlet and provision for rewind function.

Emergency stop & battery isolator.

STANDARD EQUIPMENT



Spray down gun & lance.

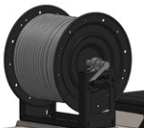

60m Hose reel with 60m of 3/8" jetting hose & ball valve.



IP68 Professional nozzle kit



JW Remote™ & Safety whip restraint

DIMENSIONS (MM)

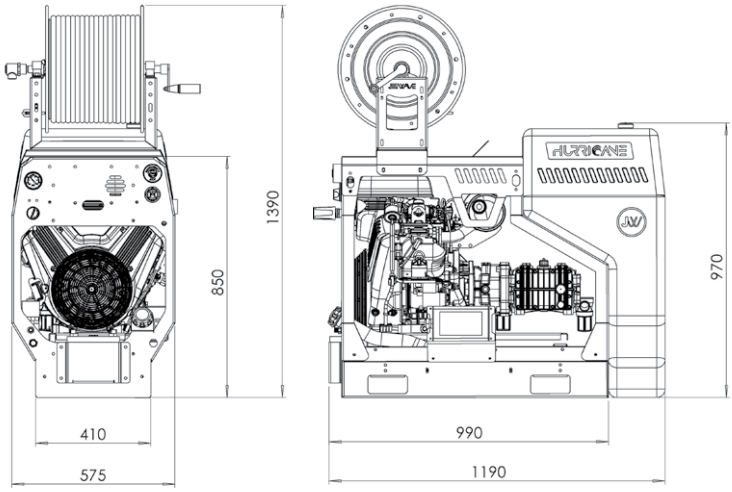

TECHNICAL DATA 0:00

HURRICANE™ G2

Product Code	JH5000-36PB
Pressure / Flow	**5080 PSI (350 BAR) / 36.4 L/PM**
Max Water Inlet Temp	50°C / 122°F
Class (ASNZS: 4223)	B (12,740 Bar/Litres)
Usage Frequency	Professional: Daily Uasge
Nozzle Size	08
Frame Structure	CNC Modular galvanised steel chassis plus satin powder coat finish and **stainless steel cover**

MOTOR FEATURES

Engine / Power	**Vanguard™ EFI Big Block (B&S)** Electric Push Button Start (air cooled w/auto speed) 37HP / 996cc
Fuel Type / Capacity / Protection	Petrol / 25L (w/level gauge) / Low Oil Shutdown

HYDRAULIC FEATURES

Pump / Head / Pistons	**JW® Italian** Triplex Plunger / Brass / Ceramic
Motor Pump Coupling / Pump RPM	Gearbox Drive / 1450RPM
Unloader Valve	Independent
Safety Valve	Yes

DIMENSIONS & WEIGHT

Machine Dimensions / Weight	Skid (with hose reel): 1190mm(L) x 575mm(W) x 1390mm(H) / 280KG

WARRANTY(S)

Unit / Pump Warranty*	2 Years / 3 Years
Engine Warranty*	3 Years

OPTIONAL ACCESSORIES

Remote Mini Reel w/60m 1/4" Hose	PW134-RRCMPL-HOP4
Remote Mini Reel Locking Plate	90012HRH-LP
Low Pressure Inlet Hose Reel w/30m hose	1065CMPLLP

Copyright © 2024 Jetwave® Group Pty Ltd. All Rights Reserved.

The manufacturer reserves the right to modify design features and technical facts without notice, due to our principals of continuous improvement.

*Coverage against defects in material and workmanship (refer to Jetwave's and component partners T&Cs).

V4.0 08/24