Hannay Reels®
The reel leader.

Hannay Reels, Inc.
553 State Route 143, Westerlo, NY 12193
www.hannay.com
Email: reels@hannay.com

Phone 1-518-797-3791
Toll Free 1-877-GO-REELS (467-3357)
Fax 1-800-REELING (733-5464)
Int'l Fax 1-518-797-3259

ISO 249
PARTS LIST

CLUTCH REDUCTION UNIT ASSEMBLY w/ Electric Clutch

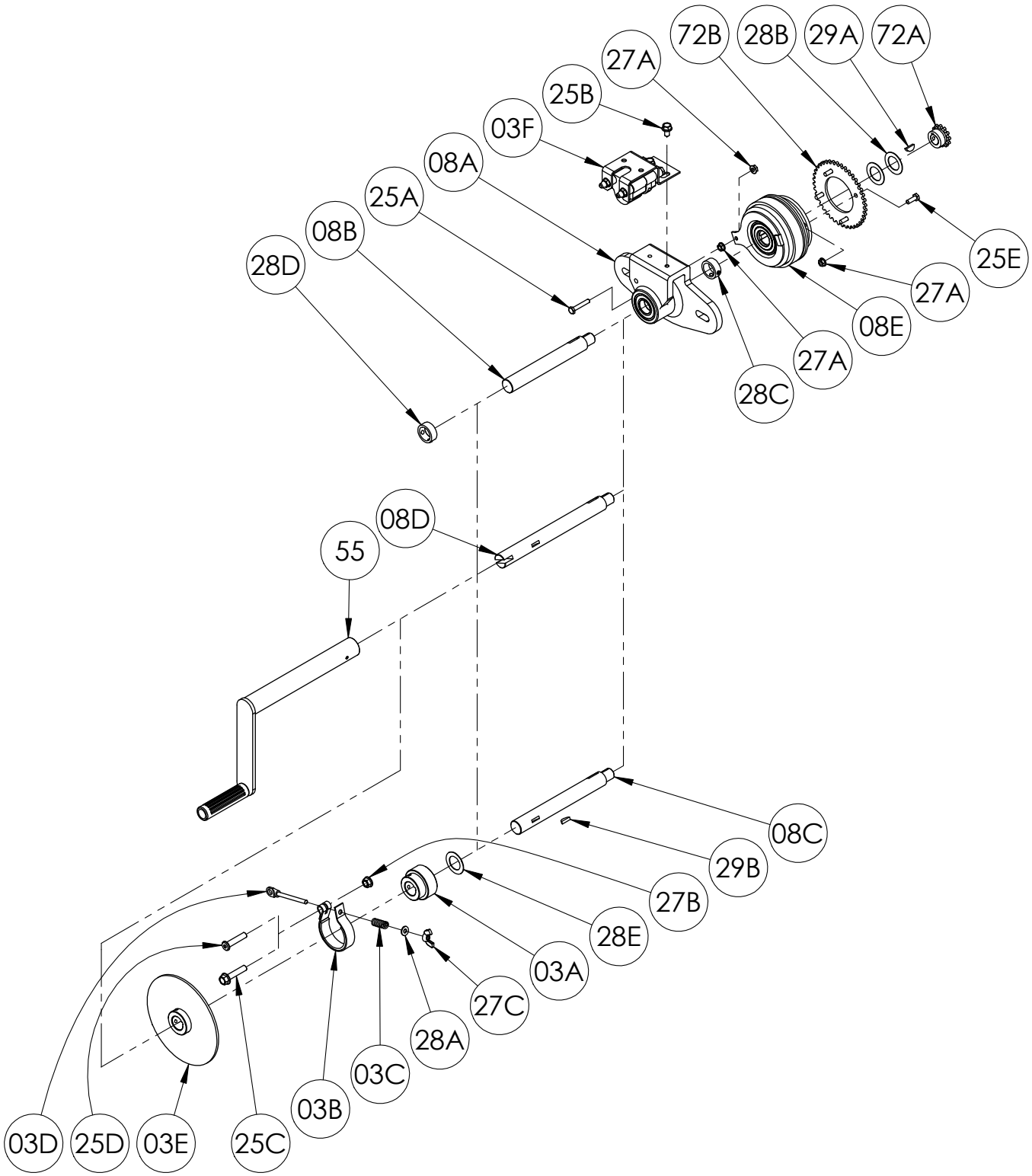

PARTS LIST - ISO 249 - Clutch/Reduction Unit Assembly (w/ Electric Clutch)

When Ordering Parts SPECIFY PART NUMBER, COMPLETE MODEL and SERIAL NUMBER OF REEL

Item #	Description	Part #	Qty
	BASE PARTS FOR ALL ASSEMBLIES (see below for additional configuration-specific parts)		
08A	Clutch/Reduction Unit Housing w/ Two Bearings (Specify Configuration)	9948.0015	1
08E	Warner Electric (12V) Clutch (#5215-58)	9948.0091	1
25A	1/4"-20 x 1-1/2" Hex Head Bolt (for Clutch Body Mounting)	9904.1004	1
25E	1/4"-20 x 3/4" Hex Head Cap Screw (for Plate Sprocket Mounting)	9904.1001	4
27A	1/4"-20 Small Flange Spinlock Nut (Armor Coat)	9904.6000	6
28B	SST Spacer (1-5/8" O.D. x 1" I.D. x 20 GA. Thick) - for between Clutch Body & 12T35 Sprocket (for reels with #35 Chain, only)	9954.0037	2
28C	PSC-1 Pinion Shaft Collar w/ Set Screw - for between Housing and Clutch Body	9914.0351	1
29A	Woodruff Key #9 (3/16" x 3/4") - for 12-Tooth Sprocket	9916.0080	1
72A	Reduction Unit Sprocket - 12T35 w/ 3/4" Bore (3/4" Long)	9948.0026	1
72A	Reduction Unit Sprocket - 12T40 w/ 3/4" Bore (not shown)	9948.0027	1
72B	Reduction Unit Sprocket - 40T35 (Bolt-On)	9948.0049	1
72B	Reduction Unit Sprocket - 48T35 (Bolt-On) (not shown)	9948.0044	1
72B	Reduction Unit Sprocket - 60T35 (Bolt-On) (not shown)	9948.0050	1
	PARTS FOR VARIOUS ASSEMBLY OPTIONS		
	ASSEMBLY WITHOUT CRANK REWIND OR BRAKE (Standard Electric Clutch/Reduction Unit)		
08B	Clutch/Reduction Shaft (1" Dia., 3/4" Step x 8" Long), per P08A-00410 (for Standard Units)	9948.0023	1
28D	PSC-1 Pinion Shaft Collar w/ Set Screw - for end of Standard Shaft	9914.0351	1
	ASSEMBLY WITH STRAP BRAKE		
03A	Band (Comet) Brake Iron Hub (1" Bore)	9947.0042	1
03B	Band (Comet) Brake Strap, only	9947.0091	1
03C	SST Band (Comet) Brake Spring (1-5/16" Length)	9947.0096	1
03D	1/4"-20 Band Brake Tension Adjustment Rod (3-1/2" Long)	9947.0094	1
08C	Clutch/Reduction Shaft (1" Dia., 3/4" Step x 9" Long), per P08A-00420 (for Air and/or Comet Brake)	9948.0022	1
08D	Clutch/Reduction Shaft (1" Dia., 3/4" Step x 10-1/2" Long), per P08A-00430 (for Auxiliary Rewind)	9948.0019	1
25C	3/8"-16 x 1-3/4" Spinlock Bolt	9904.2205	1
27B	3/8"-16 Spinlock Nut	9904.6200	1
27C	1/4"-20 Band (Comet) Brake Wing Nut	9947.0095	1
28A	1/4" Flat Washer	9954.0005	1
28E	SST Spacer (1-5/8" O.D. x 1" I.D. x 20 GA. Thick) - for between Brake Arbor and Housing	9954.0037	1
29B	Woodruff Key #9 (3/16" x 3/4") - for Brake Arbor	9916.0080	1
	ASSEMBLY WITH AIR CALIPER BRAKE		
03E	5.7361	9947.0150	1
03F	Standard Air Caliper Brake (P-38)	9947.0020	1
08C	Clutch/Reduction Shaft (1" Dia., 3/4" Step x 9" Long), per P08A-00420 (for Air and/or Comet Brake)	9948.0022	1
08D	Clutch/Reduction Shaft (1" Dia., 3/4" Step x 10-1/2" Long), per P08A-00430 (for Auxiliary Rewind)	9948.0019	1
25B	5/16"-18 x 1/2" Spinlock Bolt	9904.2158	2
28E	SST Spacer (1-5/8" O.D. x 1" I.D. x 20 GA. Thick) - for between Brake Arbor and Housing	9954.0037	1
29B	Woodruff Key #9 (3/16" x 3/4") - for Brake Arbor	9916.0080	1
	ASSEMBLY WITH STRAP AND AIR CALIPER BRAKES		
03B	Band (Comet) Brake Strap, only	9947.0091	1
03C	SST Band (Comet) Brake Spring (1-5/16" Length) (second spring not shown, double stacked in line with first)	9947.0096	2
03D	1/4"-20 Band Brake Tension Adjustment Rod (4-3/4" Long) (longer rod not shown)	9947.0104	1
03E	Brake Disc Assembly w/ Keyed Arbor (6-5/8" O.D. x 1" I.D.)	9947.0150	1
03F	Standard Air Caliper Brake (P-38)	9947.0020	1
08C	Clutch/Reduction Shaft (1" Dia., 3/4" Step x 9" Long), per P08A-00420 (for Air and/or Comet Brake)	9948.0022	1
08D	Clutch/Reduction Shaft (1" Dia., 3/4" Step x 10-1/2" Long), per P08A-00430 (for Auxiliary Rewind)	9948.0019	1
25B	5/16"-18 x 1/2" Spinlock Bolt	9904.2158	2
25D	3/8"-16 x 1-3/4" Hex Socket Button Head Bolt (head ground down to clear Disc Brake)	9947.0151	1
27B	3/8"-16 Spinlock Nut	9904.6200	1
27C	1/4"-20 Band (Comet) Brake Wing Nut	9947.0095	1
28A	1/4" Flat Washer	9954.0005	1
28E	SST Spacer (1-5/8" O.D. x 1" I.D. x 20 GA. Thick) - for between Brake Arbor and Housing	9954.0037	1
29B	Woodruff Key #9 (3/16" x 3/4") - for Brake Arbor	9916.0080	1
	ASSEMBLY WITH AUXILIARY CRANK REWIND (with or without Brake - add to any above)		
08D	Clutch/Reduction Shaft (1" Dia., 3/4" Step x 10-1/2" Long), per P08A-00430 (for Auxiliary Rewind)	9948.0019	1
55	H-18 Steel Hand Crank - E-Coated (10" Length) (see ISO-214 for parts)	9914.0011	1