HYDRAFORCE™ PUMPS
From General Pump

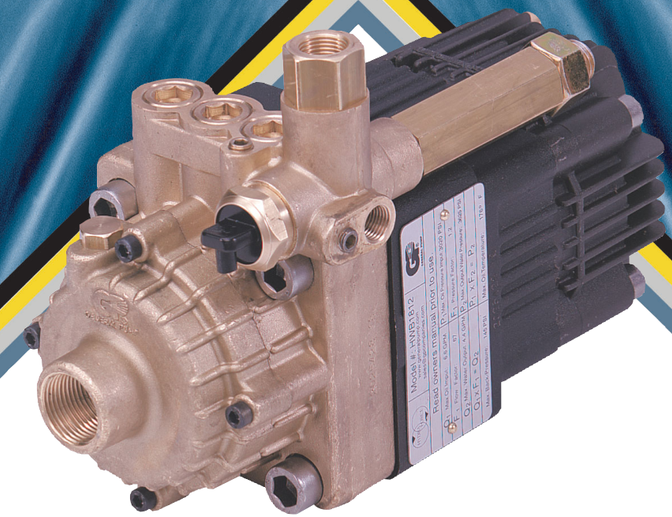

This innovative pump transforms the hydraulic pressure already available in your system into water pressure

APPLICATIONS



Service Vehicles:
road cleaning, pipe cleaning



Sweepers:
high pressure cleaning, dust suppression



Municiple Vehicles:
all kinds of municipal cleaning jobs



Tractors:
cleaning, sandblasting, flushing



Earth Drilling Machines:
cooling, cleaning joints and threads



Excavators:
cleaning, draining and excavating



Concrete Pumps:
cleaning of the concrete hopper and tubes



Concrete Trucks:
removing concrete



Fishing Boats:
cleaning, sandblasting, net cleaning



Asphalt Laying Machines:
immediate removal of hot asphalt



Hydraulic Lifts:
to use hydraulic tools mounted on lift



Fork Lifts:
maintenance, high pressure cleaning



Fire Fighting Vehicles:
pumps with water spray



Sludge Suction Trucks:
cleaning pipes and outflows

GENERAL PUMP

General Pump
1174 Northland Drive Mendota Heights, MN 55120
Tel: 651.454-6500 Toll Free: 888.474.5487
www.generalpump.com

HYDRA FORCE

HWB2512 - *8.6 GPM @ 2175 PSI*

HWB2112 - *6.6 GPM @ 2900 PSI*

HWB1812 - *4.4 GPM @ 3625 PSI*

HWB1512 - *3.3 GPM @ 4350 PSI*

GENERAL PUMP

Turn your system's oil pressure into water pressure

HYDRA FORCE

HYDRAFORCE - *Turn your system's hydraulic pressure into water pressure*

HWB SCHEMATIC

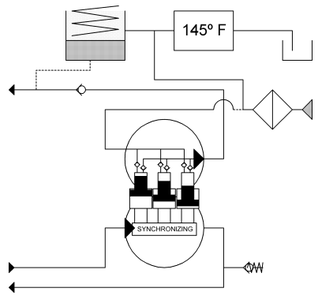

CONNECTION DIAGRAM

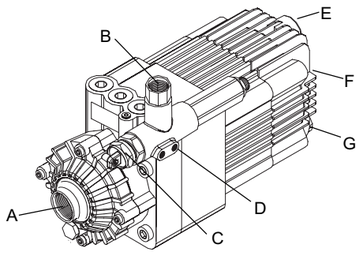

A. Inlet
B. Discharge port
C. PTP Port
D. Gauge port
E. Oil return
F. Oil inlet
G. Oil protection valve

PUMP PERFORMANCE

Model	HWB2512	HWB2112	HWB1812	HWB1512
Max inlet oil pressure PSI	3625	3625	3020	2485
Pressure Ratio Factor	.6	.8	1.2	1.75
Max Discharge pressure PSI	2175	2900	3625	4350
Multiply your system oil pressure by the Pressure Ratio Factor to determine your discharge pressure output. System PSI X Ratio Factor = Discharge PSI Example: If your hydraulic system pressure is 2000 psi, then (HWB1512) 2000 X 1.75 = 3500 psi discharge pressure				
Max inlet oil capacity GPM	6.6	6.6	6.6	6.6
Flow Ratio Factor	1.3	1	.67	.5
Max discharge flow GPM	8.6	6.6	4.4	3.3
Multiply your oil flow capacity by the Flow Ratio Factor to determine your discharge flow. System GPM X Ratio Factor = Discharge GPM Example: If your hydraulic system flow is 3.0 gpm, then (HWB1512) 6.0 X .5 = 3.0 gpm discharge flow				
Do not exceed maximum ratings. For application assistance or questions please contact GP Companies technical support. Hydraulic systems exceeding 6.6 gpm must have a flow regulator installed.				

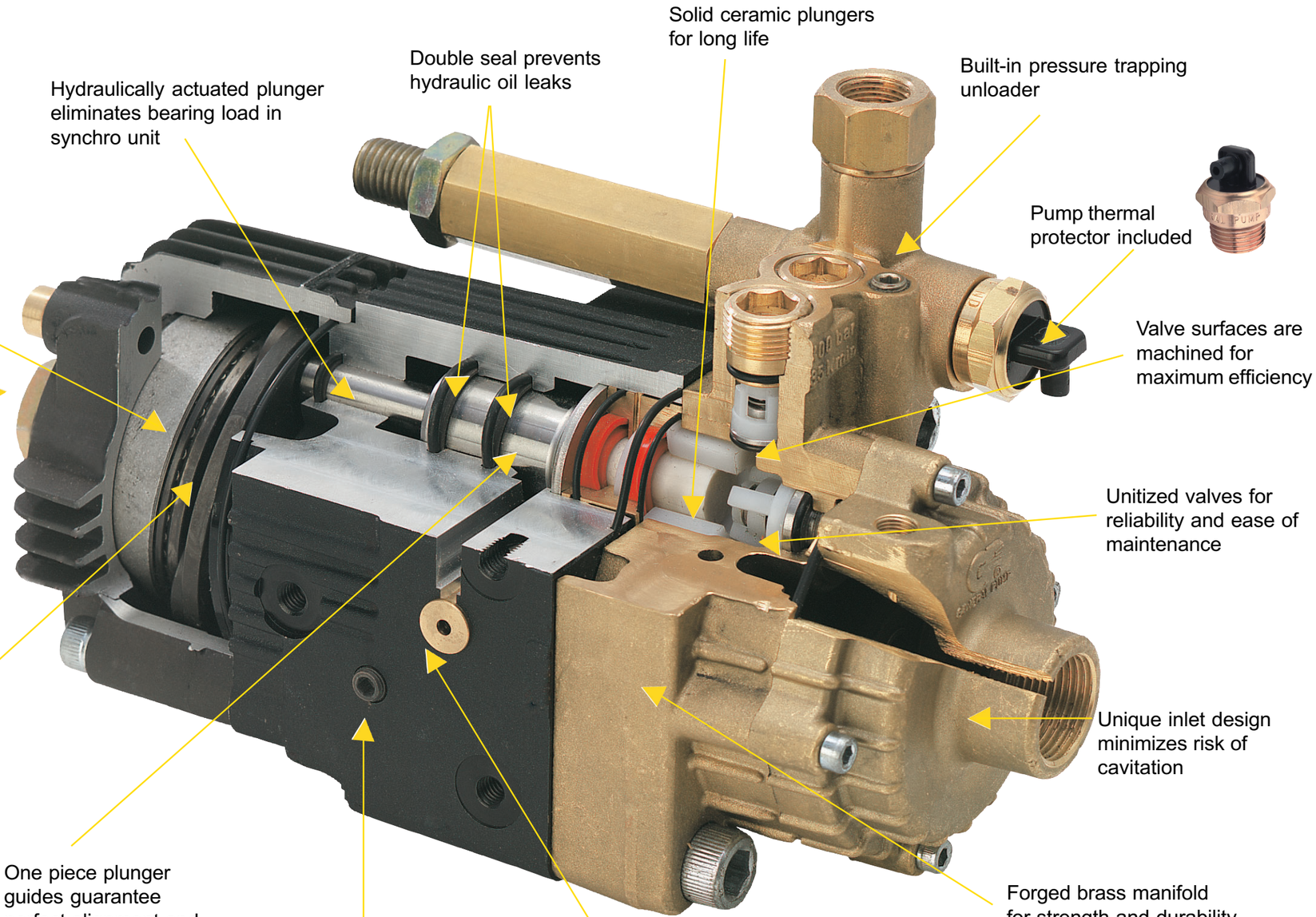

OVERALL PUMP DIMENSIONS: 11.2” x 4.7” x 7.0”