# HORNET™ G2

# FRAME PARTS BREAKDOWN




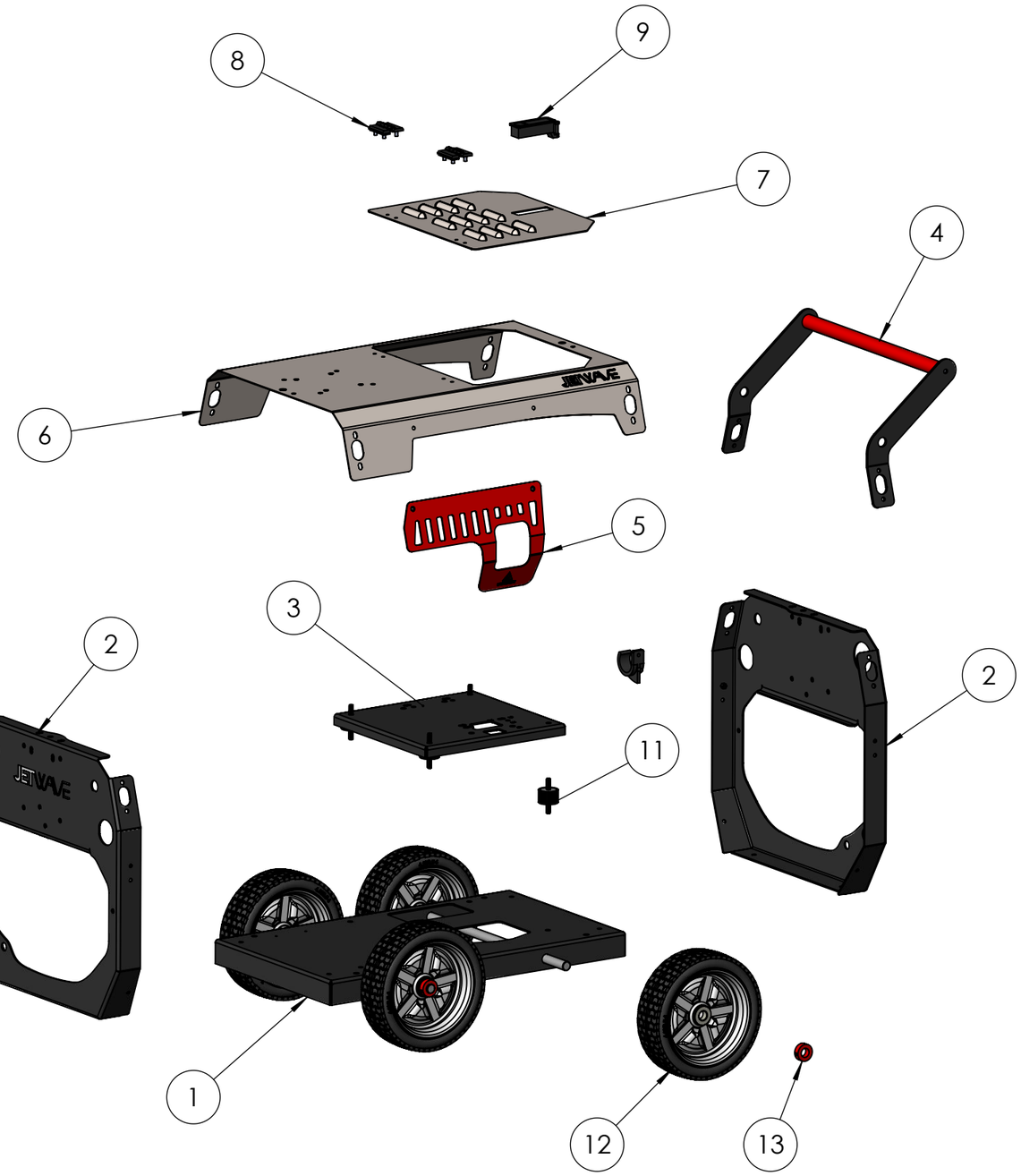


| NUMBER | PART NO. | PART DESCRIPTION | QTY |
|---|---|---|---|
| 1 | **90005LG2-B-R6** | BASE | 1 |
| 2 | **90005LG2-MFF-R5** | MAIN FRAME FRONT & REAR | 2 |
| 3 | **90005LG2-MT-R4** | MOTOR TRAY | 1 |
| 4 | **90005LG2-HAND-ASSY-R1** | HANDLE ASSY | 1 |
| 5 | **SEN-SG-R8** | SIDE GUARD | 1 |
| 6 | **90005LG2-COV-R6** | COVER | 1 |
| 7 | **90005LG2-TAPP-R4** | TOP ACCESS PLATE PETROL | 1 |
| 8 | **5413032** | POLY HINGE | 2 |
| 9 | **HSJ003** | PUSH BUTTON LOCK LATCH | 1 |
| 10 | **4000085** | VIBRATION DAMPENERSPLASTIC HOOK FOR GUN/LANCE | 2 |
| 11 | **M10403070** | VIBRATION DAMPENERS | 4 |
| 12 | **DP80072** | WHEEL 10" LOW PROFILE SOLID | 4 |
| 13 | **DP-LOCK** | WHEEL LOCK (JWRED) GRUB SET SCREW | 4 |

HORNET™ G2

# GX390 MOTOR PARTS BREAKDOWN

1 COMPLETE MOTOR - GX390UT2QXUZ

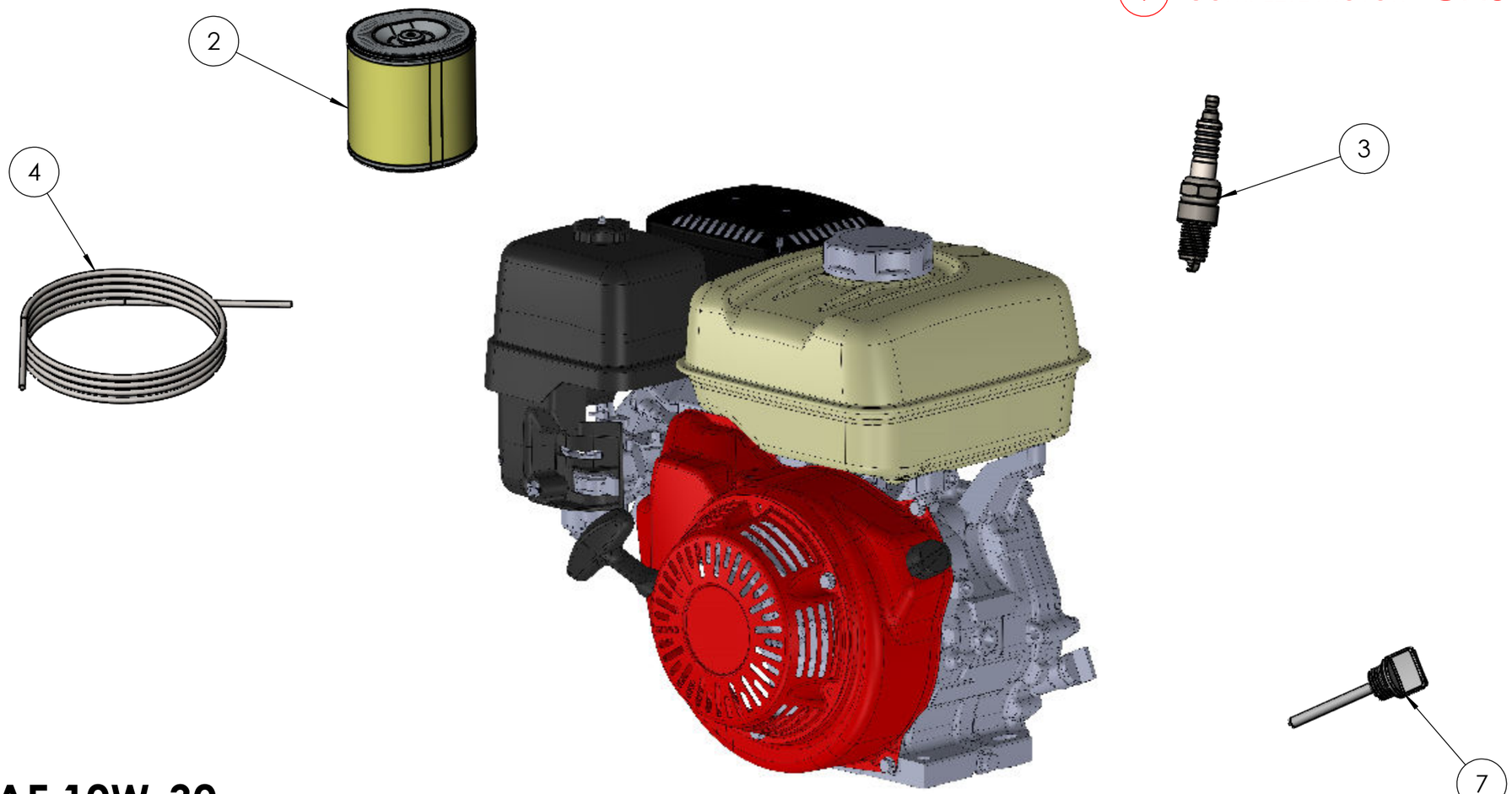


## ENIGINE OIL - SAE 10W-30

| NUMBER | PART NO. | PART DESCRIPTION | QTY |
|---|---|---|---|
| 1 | **GX390UT2QXUZ** | COMPLETE HONDA MOTOR 13HP GX390 QX | 1 |
| 2 | **17210-ZE3-505** | AIR FILTERHONDA AIR FILTER GX340/390 | 1 |
| 3 | **BPR6ES** | SPARK PLUG | 1 |
| 4 | **28462-ZE3-W01** | PULL CORD | 1 |
| 5 | **28400-ZE3-W02ZP** | GX390 CMPL PULL START ASSEMBLY | 1 |
| 6 | **36100-ZE1-015** | HONDA ON/OFF SWITCH | 1 |
| 7 | **15600-735-003** | OIL DIPSTICK GX390 | 1 |

HORNET™ G2

# QXE390 MOTOR PARTS BREAKDOWN

1 COMPLETE MOTOR - GX390UT2QXER

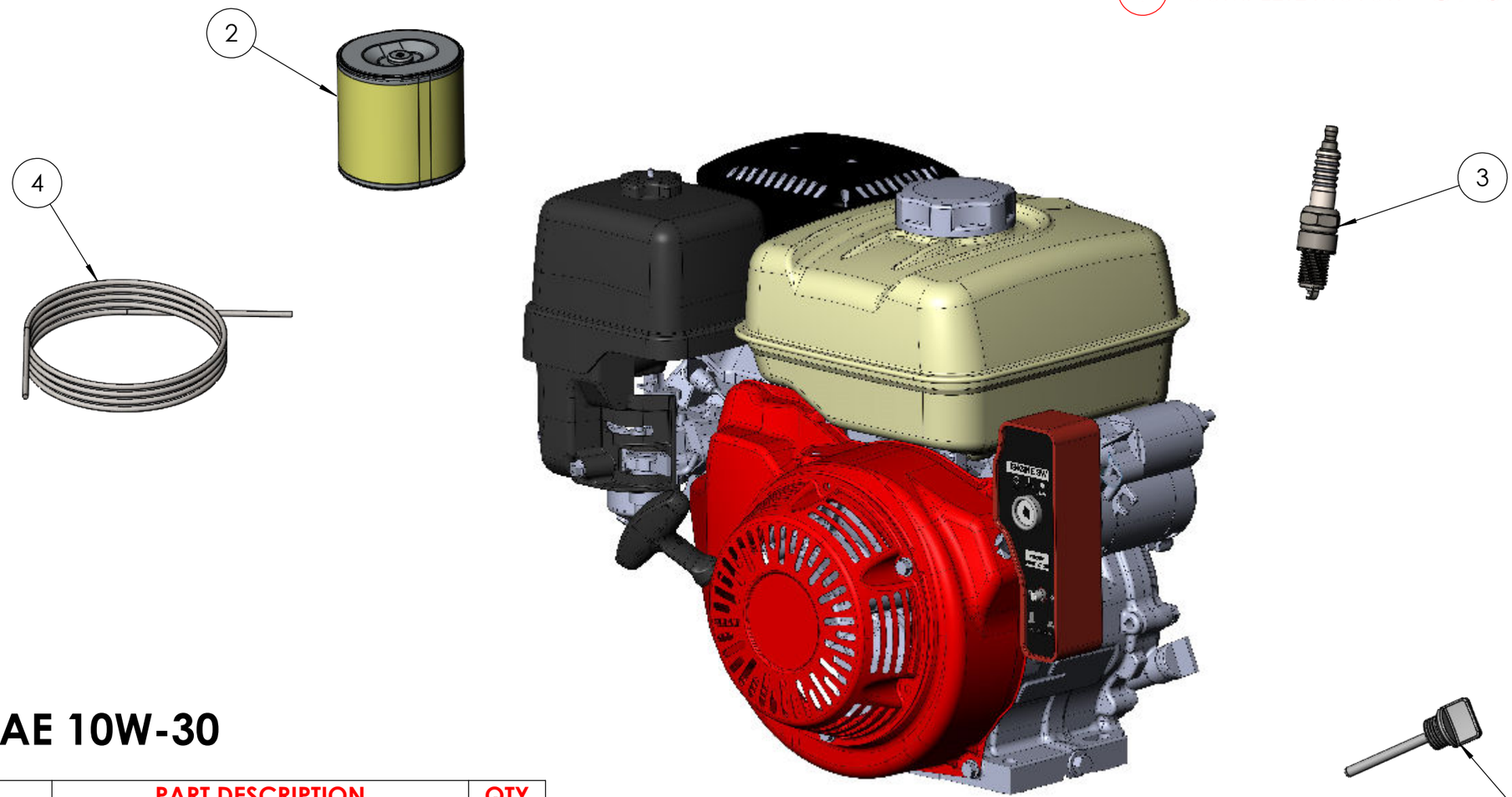


## ENIGINE OIL - SAE 10W-30

| NUMBER | PART NO. | PART DESCRIPTION | QTY |
|---|---|---|---|
| 1 | **GX390UT2QXER** | COMPLETE HONDA MOTOR 13 HP GX390 QXE | 1 |
| 2 | **17210-ZE3-505** | AIR FILTERHONDA AIR FILTER GX340/390 | 1 |
| 3 | **BPR6ES** | SPARK PLUG | 1 |
| 4 | **28462-ZE3-W01** | PULL CORD | 1 |
| 5 | **28400-ZE3-W02ZP** | GX390 CMPL PULL START ASSEMBLY | 1 |
| 6 | **-** | KEY | 1 |
| 7 | **15600-735-003** | OIL DIPSTICK GX390 | 1 |

HORNET™ G2

# IGX390 MOTOR PARTS BREAKDOWN

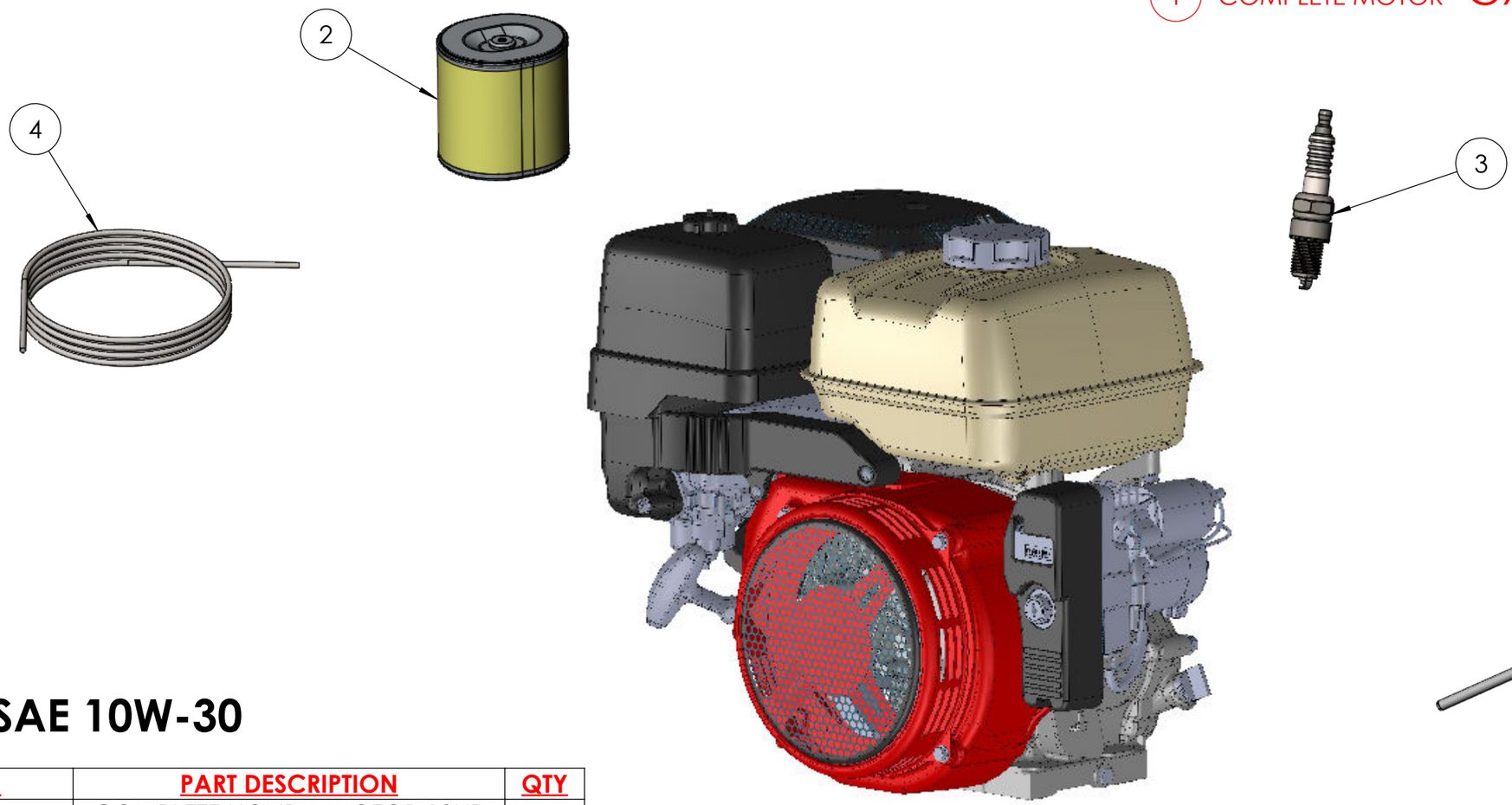


## ENIGINE OIL - SAE 10W-30

| NUMBER | PART NO. | PART DESCRIPTION | QTY |
|---|---|---|---|
| 1 | **GX390UT2QZNR** | COMPLETE HONDA MOTOR 13HP IGX390 20AMP ALTER | 1 |
| 2 | **17210-ZE3-505** | AIR FILTERHONDA AIR FILTER GX340/390 | 1 |
| 3 | **BPR6ES** | SPARK PLUG | 1 |
| 4 | **28462-ZE3-W01** | PULL CORD | 1 |
| 5 | **28400-ZE3-W01** | GX390 CMPL PULL START ASSEMBLY | 1 |
| 6 | **-** | KEY | 1 |
| 7 | **15600-735-003** | OIL DIPSTICK GX390 | 1 |

HORNET™ G2

# PUMP FITTINGS PARTS BREAKDOWN

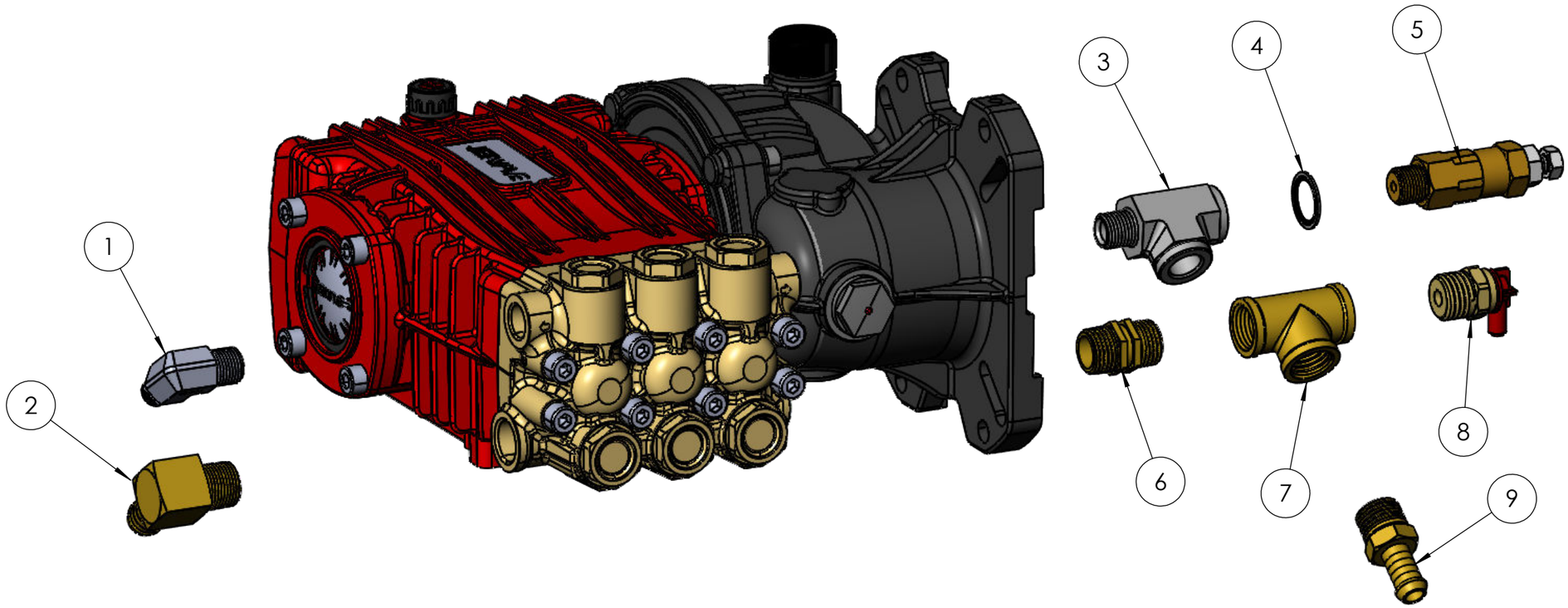


| NUMBER | PART NO. | PART DESCRIPTION | QTY |
|---|---|---|---|
| 1 | **S49-0604** | SS304 ELBOW 3/8" BSPT M X 1/4" BSPT M | 1 |
| 2 | **06003-0808** | BR 1/2 TAIL 1/2 THREAD MALE | 1 |
| 3 | **S48-060606SS** | 1/2 X 1/2 X 1/2 F/F/F TEE | 1 |
| 4 | **RL21D-06** | 3/8" DOUTY SEAL | 1 |
| 5 | **60158000** | VS240 RELIEF VALVE 3/8M | 1 |
| 6 | **208315** | NIPPLE HEX BRASS 20mm | 1 |
| 7 | **209715** | 1/2 X 1/2 X 1/2 F/F/F TEE | 1 |
| 8 | **60.0630.70** | VT6 THERMAL VALVE 1/2" | 1 |
| 9 | **06003-0808** | BR 1/2 TAIL 1/2 THREAD MALE | 1 |

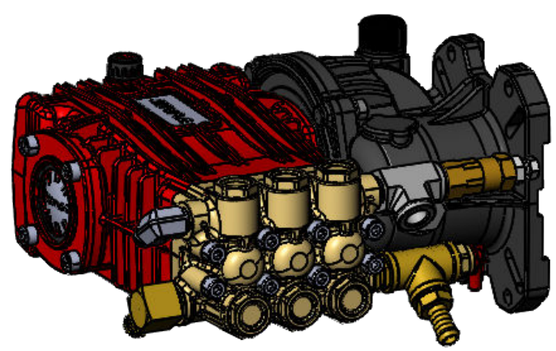

# HORNET™ G2

# JP21.21U3 3000-21 PUMP PARTS BREAKDOWN

**PISTON FASTNER KIT**

| KIT 01206 | |
|---|---|
| ITEM NO. | QTY |
| A1 | 3 |
| A2 | 3 |
| A3 | 3 |
| A4 | 3 |
| A5 | 3 |

**WATER SEAL KIT**

| KIT 01028 | |
|---|---|
| ITEM NO. | QTY |
| B1 | 3 |
| B2 | 3 |
| B3 | 3 |

**VALVE KIT**

| KIT 01002 | |
|---|---|
| ITEM NO. | QTY |
| C1 | 6 |
| C2 | 6 |

**BRASS RING KIT**

| KIT 01208 | |
|---|---|
| ITEM NO. | QTY |
| D1 | 3 |
| D2 | 3 |
| D3 | 3 |

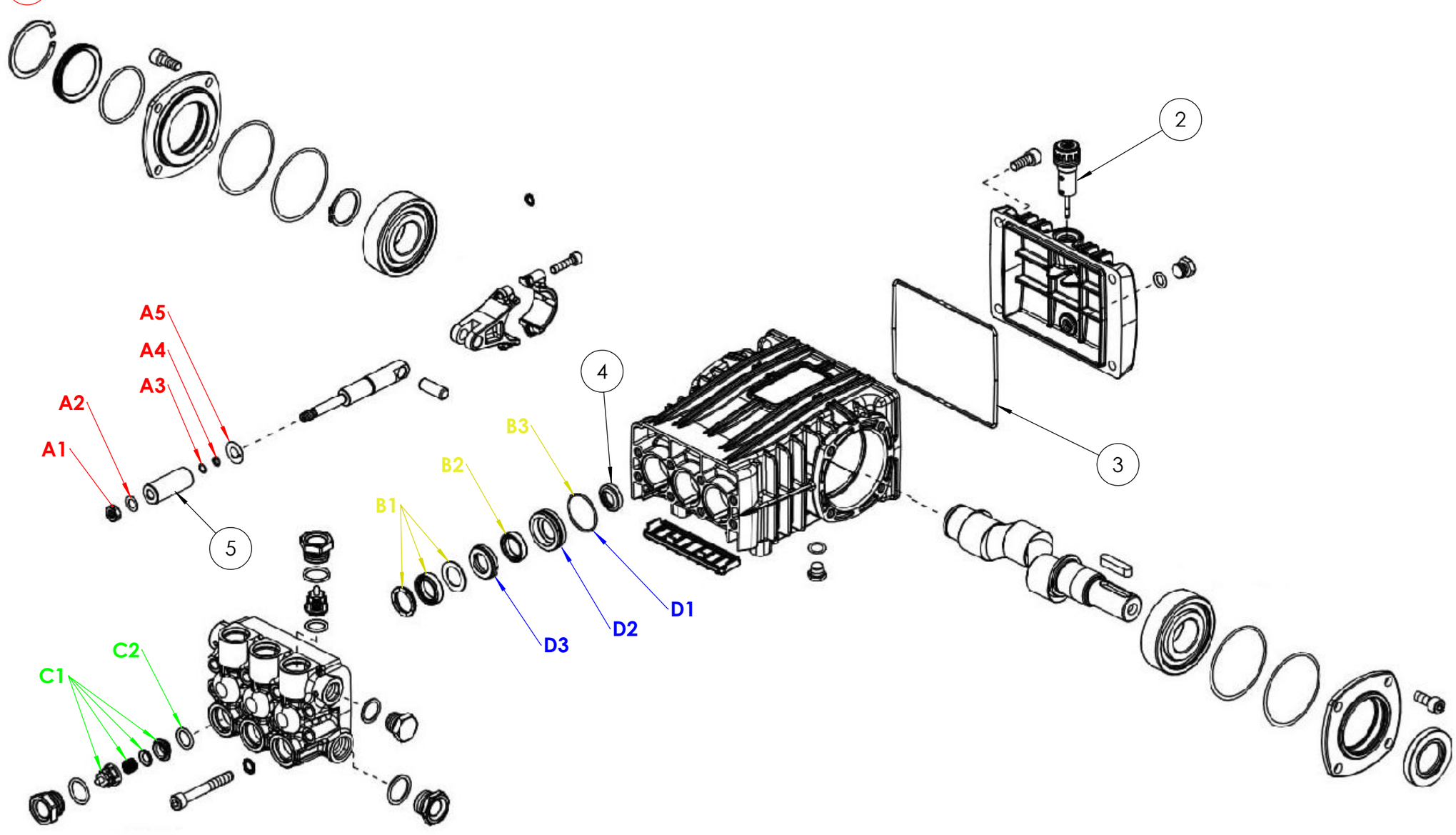


| NUMBER | PART NO. | PART DESCRIPTION | QTY |
|---|---|---|---|
| 1 | **JP21.21U3** | COMPLETE PUMP | 1 |
| 2 | **162504** | OIL DIPSTICK | 1 |
| 3 | **1101N6** | GASKET | 1 |
| 4 | **000718** | OIL SEALS | 3 |
| 5 | **120571** | PISTONS | 3 |

**OIL TYPE - SAE15W40 - 250ml**

HORNET™ G2

# JP30.15U4 4060-15 PUMP PARTS BREAKDOWN

**PISTON FASTNER KIT**

| KIT 01206 | |
|---|---|
| ITEM NO. | QTY |
| A1 | 3 |
| A2 | 3 |
| A3 | 3 |
| A4 | 3 |
| A5 | 3 |

**WATER SEAL KIT**

| KIT 01028 | |
|---|---|
| ITEM NO. | QTY |
| B1 | 3 |
| B2 | 3 |
| B3 | 3 |

**VALVE KIT**

| KIT 01030 | |
|---|---|
| ITEM NO. | QTY |
| C1 | 6 |
| C2 | 6 |

**BRASS RING KIT**

| KIT 01208 | |
|---|---|
| ITEM NO. | QTY |
| D1 | 3 |
| D2 | 3 |
| D3 | 3 |

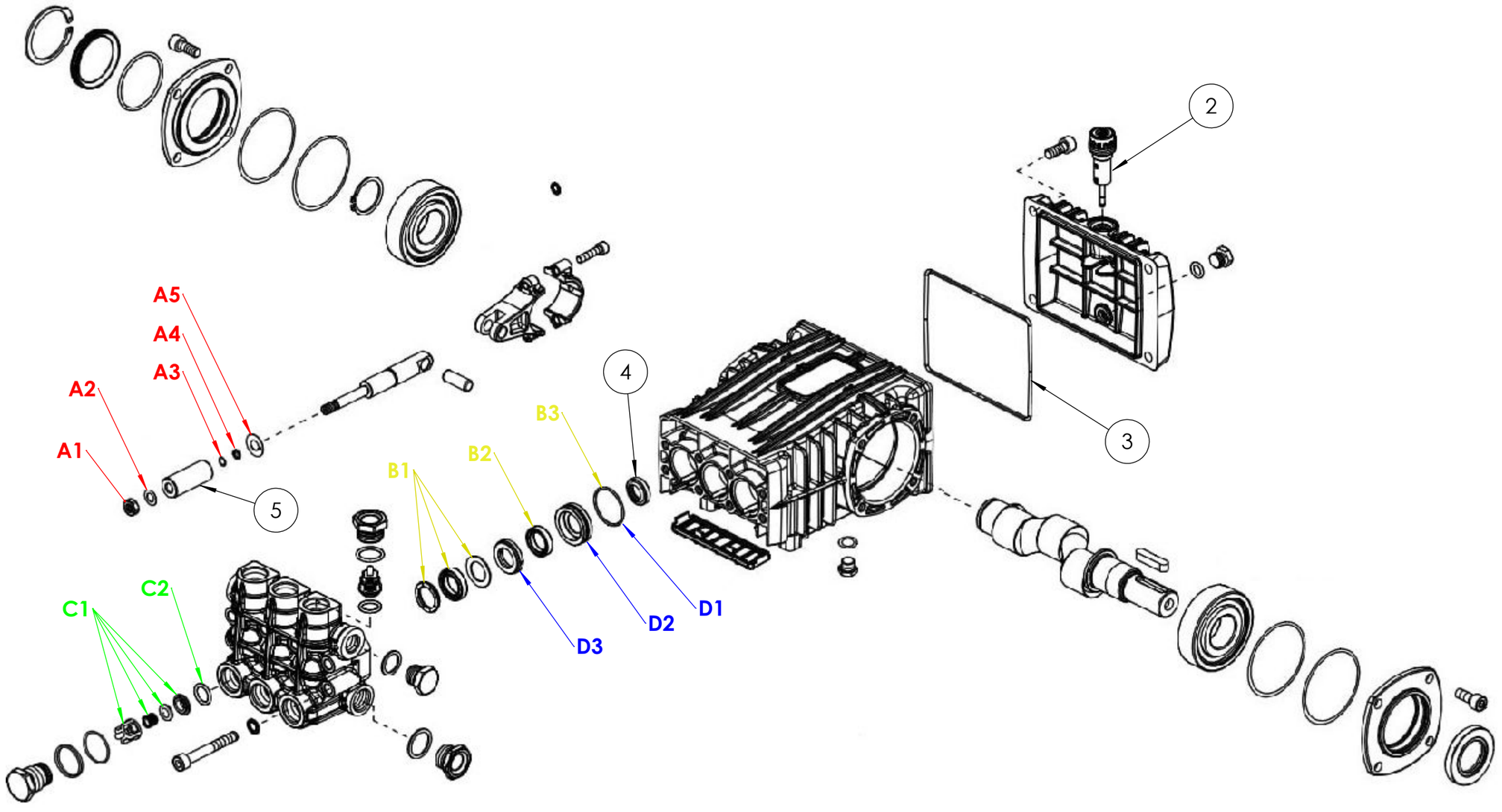


| NUMBER | PART NO. | PART DESCRIPTION | QTY |
|---|---|---|---|
| 1 | **JP30.15U4** | COMPLETE PUMP | 1 |
| 2 | **162504** | OIL DIPSTICK | 1 |
| 3 | **1101N6** | GASKET | 1 |
| 4 | **000718** | OIL SEALS | 3 |
| 5 | **120571** | PISTONS | 3 |

**OIL TYPE - SAE15W40 - 250ml**

HORNET™ G2

# GEARBOX PARTS BREAKDOWN

1 COMPLETE GEARBOX ASSY

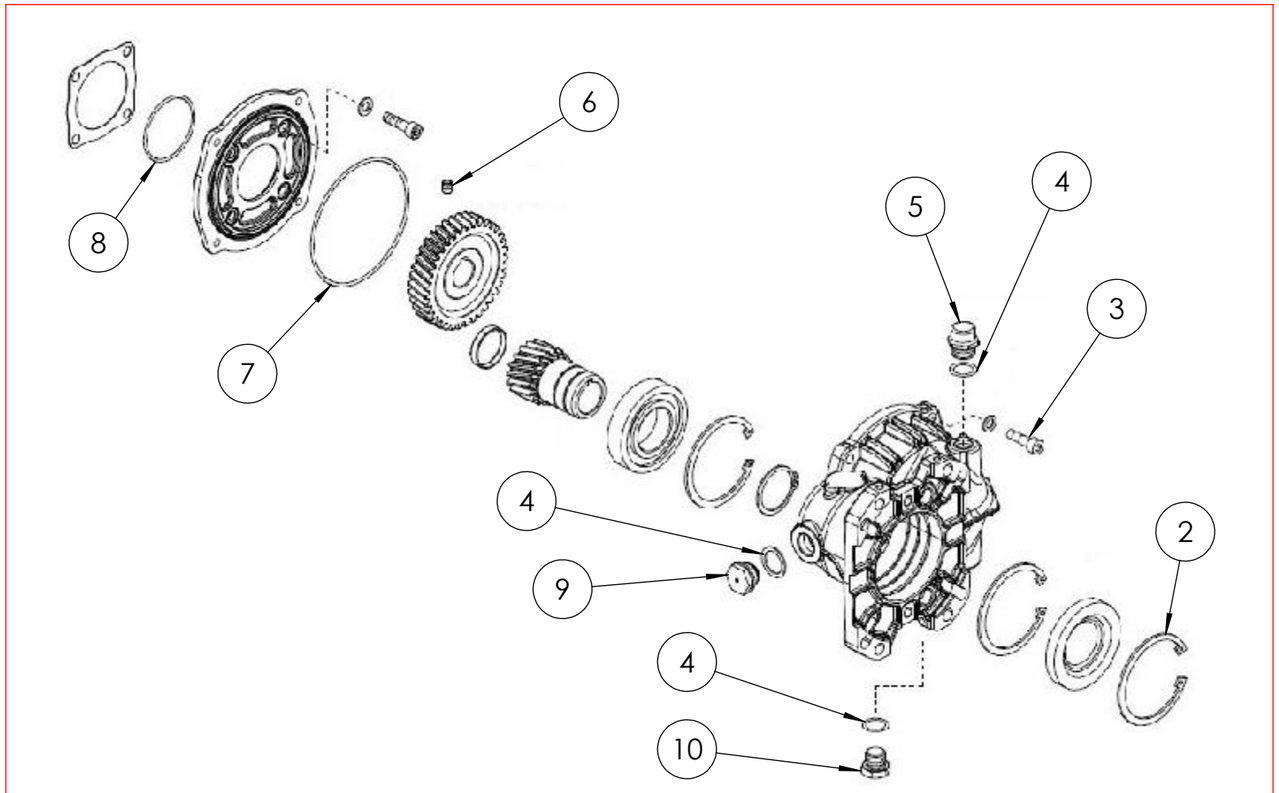


## OIL TYPE - SAE80W90 - 300mL

| NUMBER | PART NO. | PART DESCRIPTION | QTY |
|---|---|---|---|
| 1 | **JGB1.22HPURC** | REDUCTION GEARBOX UP TO 22HP 1" 25.4mm | 1 |
| 2 | **000787** | OIL SEAL | 1 |
| 3 | **180511** | GEARBOX BOLTS | 4 |
| 4 | **RL21D-08** | OIL PLUG O-RING | 2 |
| 5 | **1603M8** | OIL PLUG 1/2" | 1 |
| 6 | **061407** | GRUBSCREW | 1 |
| 7 | **110175** | GEARBOX LARGE O-RING | 1 |
| 8 | **1101D1** | GEARBOX SMALL O-RING | 1 |
| 9 | **1603M6** | SIGHT GLASS | 1 |
| 10 | **160362** | GEARBOX PLUG | 1 |

HORNET™ G2

# WATER FILTER PARTS BREAKDOWN

1 COMPLETE ASSY

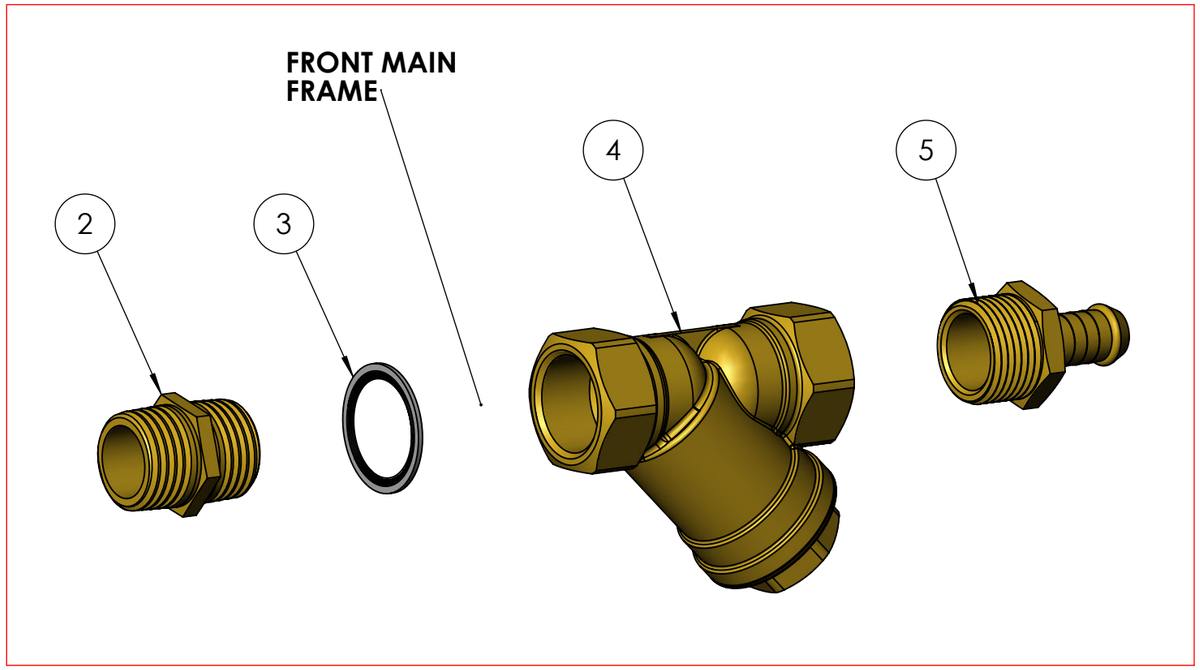


| NUMBER | PART NO. | PART DESCRIPTION | QTY |
|---|---|---|---|
| 1 | **JWA-511** | COMPLETE ASSY | 1 |
| 2 | **208315** | NIPPLE HEX BRS (1/2") | 1 |
| 3 | **RL21D-12** | DOWTY SEAL 3/4 BSP STD | 1 |
| 4 | **23075-0808** | 1/2 Y STRAINER BRS FF | 1 |
| 5 | **06003-0812** | BR 3/4 TAIL 1/2 THREAD MALE | 1 |

HORNET™ G2

# UNLOADER VALVE PART BREAKDOWN

## 7 COMPLETE UNLOADER ASSY

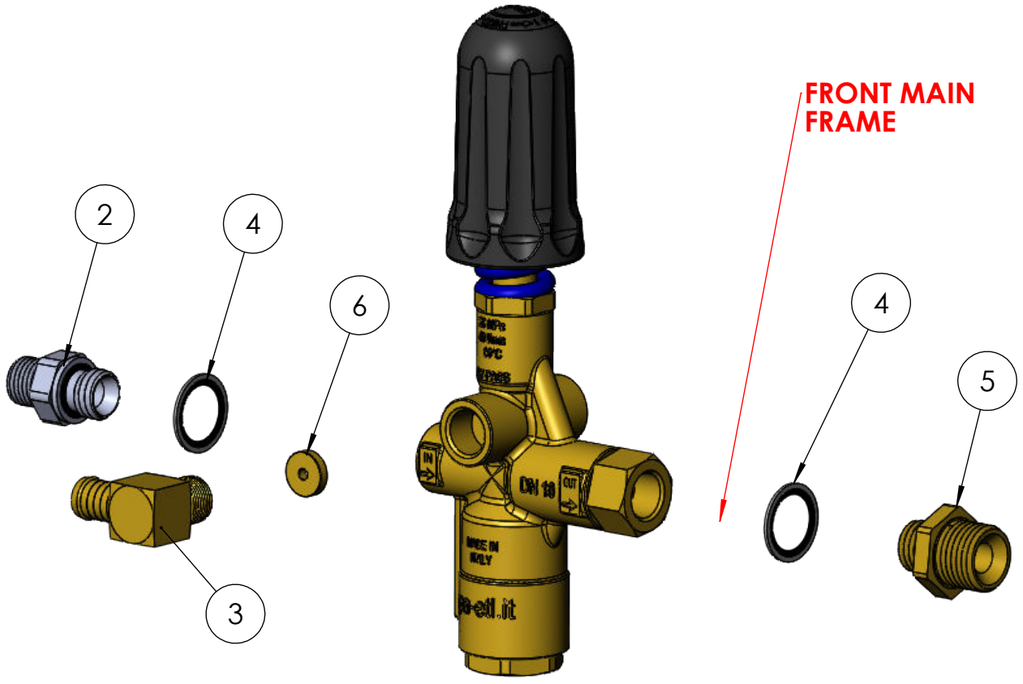


| NUMBER | PART NO. | PART DESCRIPTION | QTY |
|---|---|---|---|
| 1 | **60240000** | PULSAR ZERO UNLOADER 3/8" F+KNOB | 1 |
| 2 | **S46-0606** | SS304 NIPPLE 3/8" BSPP M X 3/8" BSPP M | 1 |
| 3 | **06006-0806** | BR 1/2 TAIL 3/8" THREAD MALE ELBOW | 1 |
| 4 | **RL21D-06** | DOWTY SEAL 3/8" BSPP STD | 1 |
| 5 | **26003031** | NIPPLE A M22X1.5 3/8" BSP M | 1 |
| 6 | **60242331R** | RESTRICTOR 3.5mm | 1 |
| 7 | **JWA-504B** | COMPLETE UNLOADER ASSY | 1 |

## 1 UNLOADER VALVE

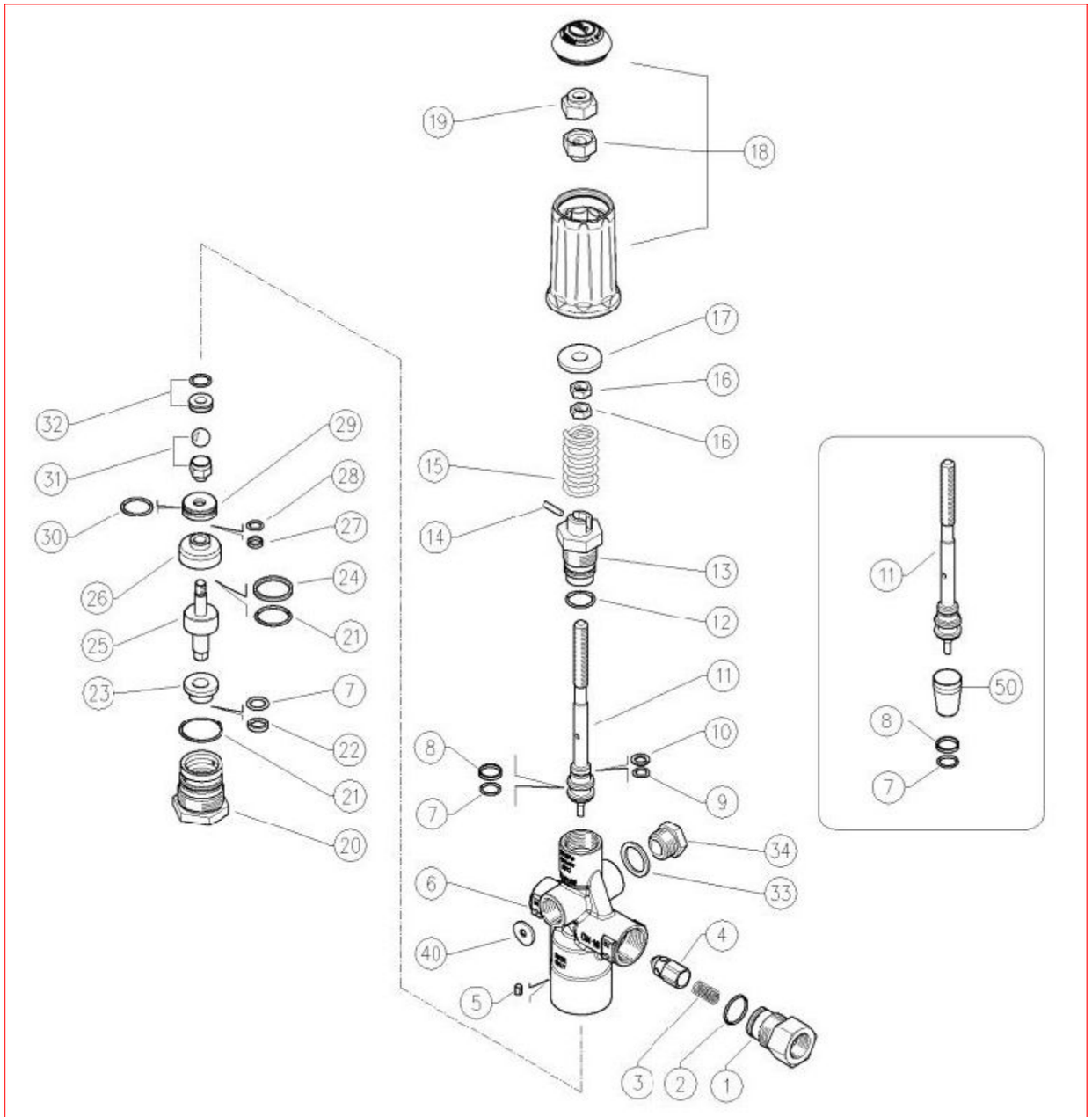

# HORNET™ G2

# FRONT COMPONENTS PARTS BREAKDOWN

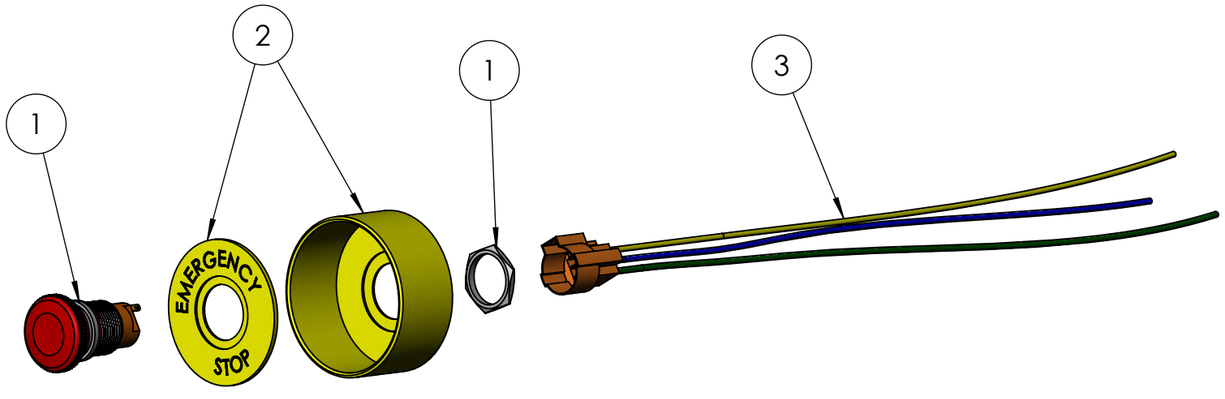


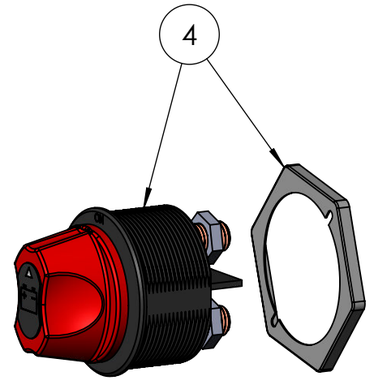


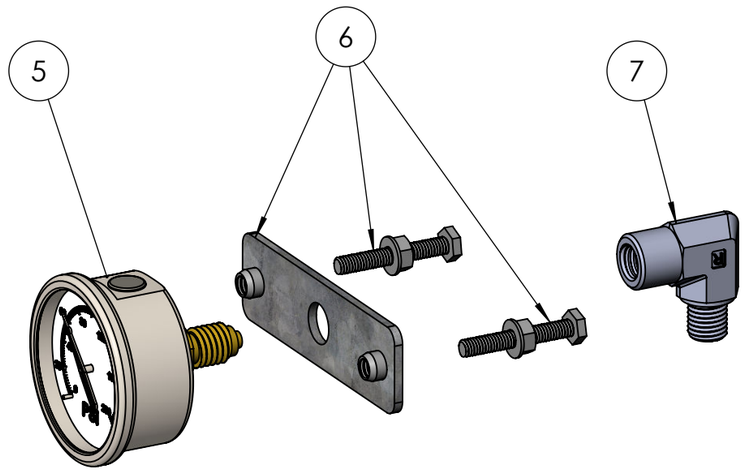


| NUMBER | PART NO. | PART DESCRIPTION | QTY |
|---|---|---|---|
| 1 | **LB22M-JW** | S/STEEL 22mm JETWAVE EMERGENCY STOP BUTTON | 1 |
| 2 | **EM-60** | PROTECTIVE SHROUD - 22mm EMERGENCY STOP | 1 |
| 3 | **WPLB22M** | WIRE PLUG TO SUIT S/STEEL JW LB E/STOP | 1 |
| 4 | **75920-05BX** | BATTERY ISOLATOR SWITCH WITH KEY | 1 |
| 5 | **13003540** | PRESS GAUGE BACK ENTRY 1/4BSP 0-600 | 1 |
| 6 | **JWBRAK-2** | GALV GAUGE BRACKET | 3 |
| 7 | **S25-0404** | CB54-0404 1/4 X 1/4 M/F ELBOW | 1 |

HORNET™ G2

# HOSES PARTS BREAKDOWN

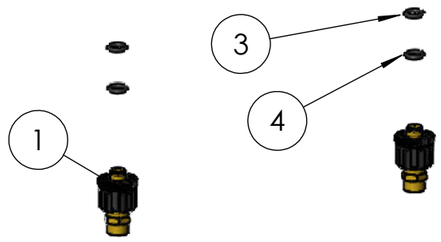


## 2 COMPLETE 15m HOSE



## 8 COMPLETE CHEM LINE

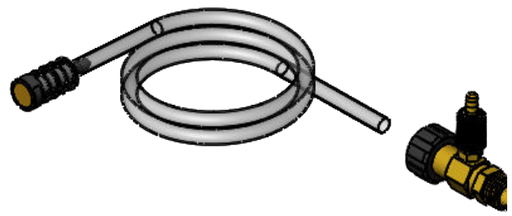

## 9 COMPLETE GAUGE HOSE



## 5 COMPLETE HIGH PRESSURE LEAD HOSE



## 6 COMPLETE INLET HOSE



## 7 COMPLETE BYPASS HOSE

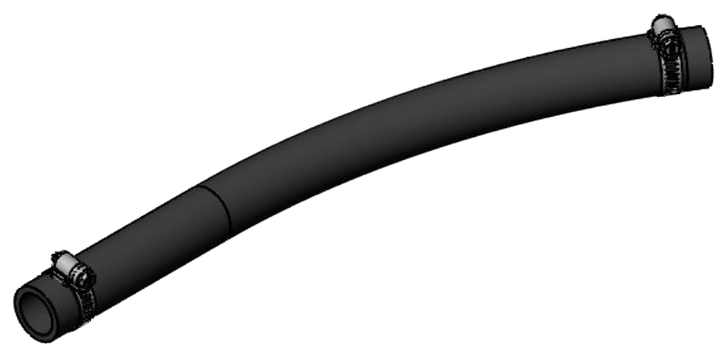

| NUMBER | PART NO. | PART DESCRIPTION | QTY |
|---|---|---|---|
| 1 | **26025050** | 3/8" QUICK COUPLING | 2 |
| 2 | **JWA017-SC** | COMPLETE 15m HOSE | 1 |
| 3 | **10310995** | O RING 2.4x9.3 VITON | 2 |
| 4 | **10401001** | BACK RING 13.9x10.2x1.2 | 2 |
| 5 | **JWA-501A** | COMPLETE LEADER HOSE | 1 |
| 6 | **-** | COMPLETE INLET HOSE | 1 |
| 7 | **-** | COMPLETE BYPASS HOSE | 1 |
| 8 | **JWA-CHEM1** | COMPLETE CHEM LINE | 1 |
| 9 | **TPH-0450.1.28** | COMPLETE GAUGE HOSE | 1 |

HORNET™ G2

# BATTERY PARTS BREAKDOWN

*ELECTRIC START MODELS ONLY

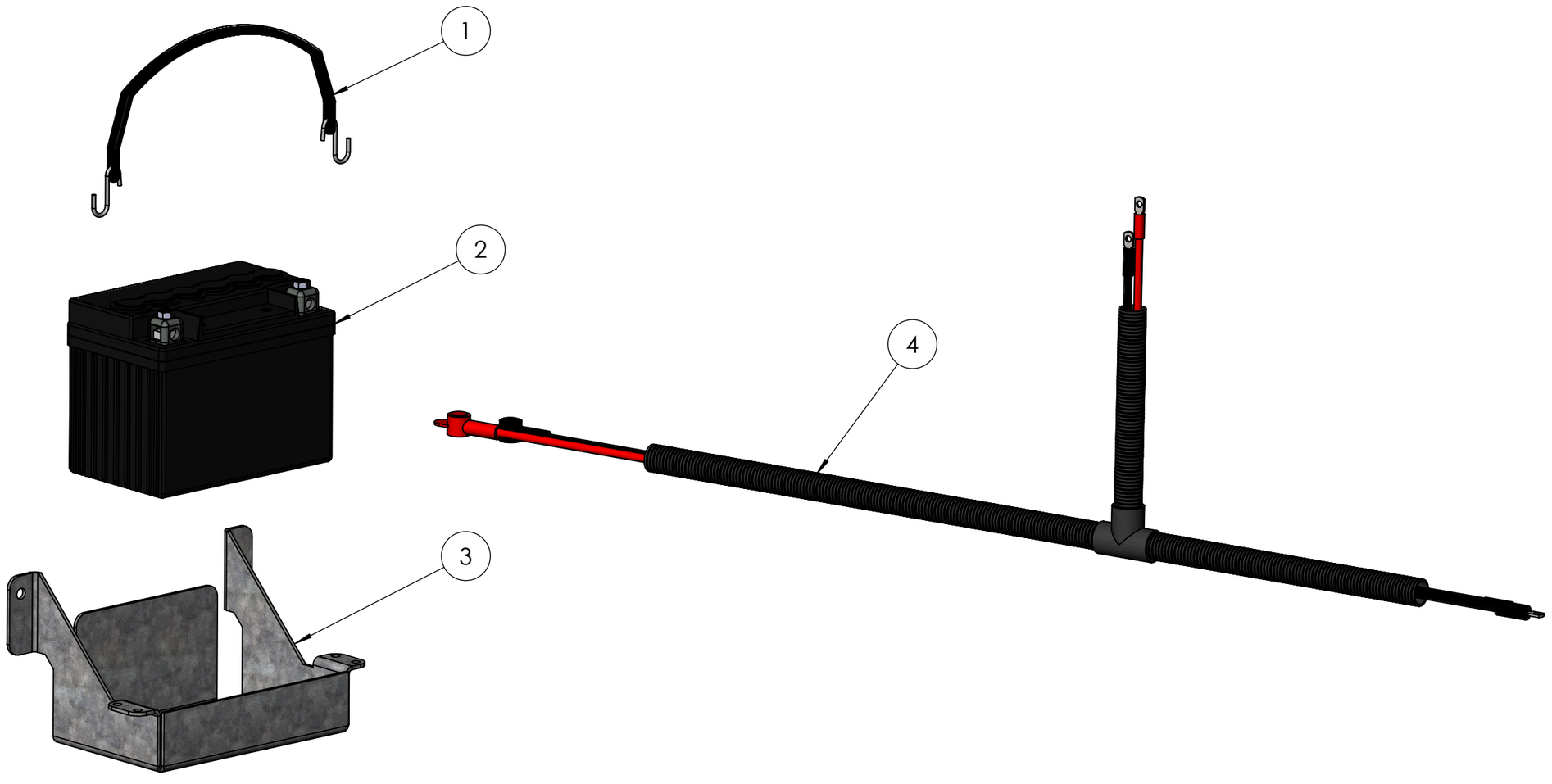


| NUMBER | PART NO. | PART DESCRIPTION | QTY |
|---|---|---|---|
| 1 | **80039** | RUBBER BATTERY STRAP | 1 |
| 2 | **U1R-280** | DELKOR BATTERY 280CCA RIGHT POST | 1 |
| 3 | **90005LG2-BATCRAD-R4** | HORNET G2 FRAME BATTERY CRADLE | 1 |
| 4 | **HPHG2-LOOM** | HORNET G2 BATTERY LOOM | 1 |

HORNET™ G2

# GUN & LANCE PARTS BREAKDOWN

## 1 COMPLETE GUN




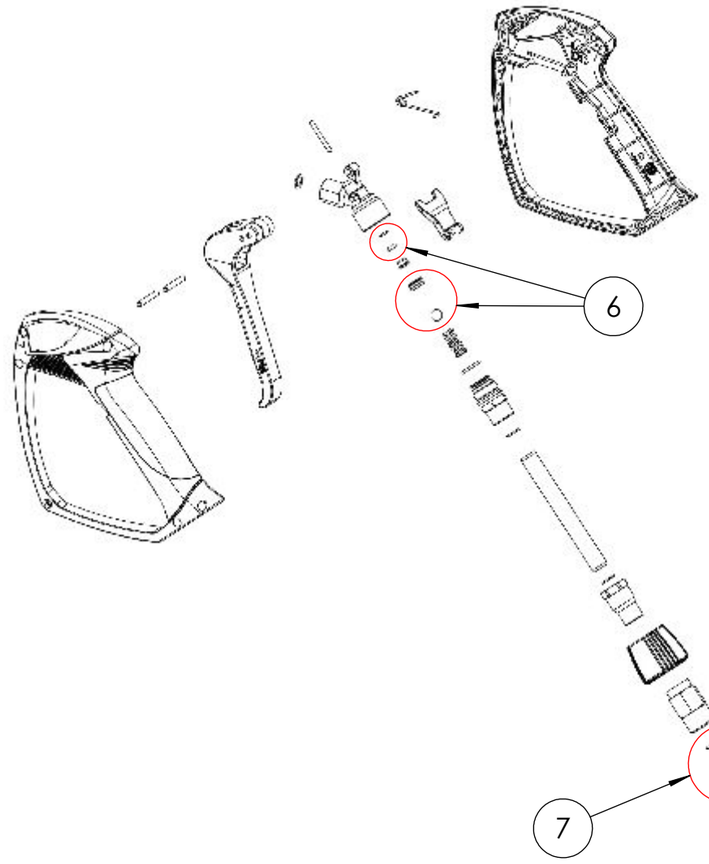


| NUMBER | PART NO. | PART DESCRIPTION | QTY |
|---|---|---|---|
| 1 | **J5000** | J5000 DUROTECH GUN W/M22 SWIVEL | 1 |
| 2 | **41091900.04 - ASSY** | COMPLETE TWIN LANCE 4000/15 | 1 |
| 2 | **41091900.06 - ASSY** | COMPLETE TWIN LANCE 3000/21 | 1 |
| 3 | **41091900** | TWIN LANCE LD7 570mm 1/4 WITH NOZZLE PROTECTOR | 1 |
| 4 | **30130** | NOZZLE 1/4 LOW PRESSURE 40/30 | 1 |
| 5 | **30104** | NOZZLE 1/4 LECHLER 15 04 4000/15 | 1 |
| 5 | **30106** | NOZZLE 1/4 LECHLER 15 06 3000/21 | 1 |
| 6 | **4019900011** | J5000 REPAIR KIT | 1 |
| 7 | **4019900012** | J5000 SWIVEL REPAIR KIT | 1 |
| 8 | **10310995** | O RING 2.4X9.3 VITON | 1 |
| 9 | **10401001** | BACK RING 13.9X10.2X1.2 | 1 |

## 2 COMPLETE TWIN LANCE

