DAVEY



5113HE with Honda GX/E Engine

DAVEY
Firefighter®

Model Number:
5190HE, 5113HE

WARRANTY
Up to 5 YEARS - Wet end*
3 YEARS - Honda GX motors

APPLICATIONS

Ideal for firefighting, tanker to tanker water transfer, high head general water transfer, sheep jetting, irrigation, boom spraying and travelling irrigators.

RUGGED, ECONOMICAL SINGLE STAGE ENGINE DRIVEN WATER TRANSFER PUMP

FEATURES & BENEFITS

- **Driven by a 270cc or 389cc Honda GX/E engine** fitted with an electric start.
- **Heavy duty wide vane impeller** or longer life, improved performance and easier cleaning in the case of blockage.
- **Single impeller design** provides the versatility of high flow rates with strong pressure.
- **Thrust balanced impeller design** to extend engine life.
- **Pump casing, diffusers and impellers manufactured from quality corrosion resistant marine grade aluminium** for long life.
- **NEW 3 way discharge port for easy installation with a choice of plumbing sizes.** The NEW 3 way discharge is easily adapted to the old 3 way outlets.
- **Polyester coated pump casing, exterior and interior,** for added corrosion resistance.
- **Self priming from 6m** for more versatile installation options.
- **Patented floating impeller neckrings front and back.** The front neckring helps improve pumping efficiency, the back neckring helps extend seal life and dramatically reduce engine wear.
- **Huge 1½" priming port** for extra quick filling.
- **Large drain port with bayonet fit plugs.** Plugs have safety retention system.
- **Low-oil protection on all models** - engines won't start or run if oil level is inadequate, thus protecting your engine.
- **All engines feature cast iron cylinder bore** for long life.
- **Electric starter (12Vac 30Amp hour battery and leads required) and recoil starter fitted,** ensures a choice of starting methods, even if the battery is flat or removed.
- **Viton seal and o-ring kit available** for herbicide/ insecticide spraying.

Engine Driven Pumps

DAVEY

OPERATING LIMITS	
Flow capacities to	900 lpm
Maximum total head	54m
Maximum suction lift	6m
Maximum water temperature	50°C
Minimum water temperature	1°C
Minimum suction pipe size	2"
Suction pipe strainer	Required
Inlet size*	2" BSP(M)
Outlet sizes^	1 x 2" BSP(M)
	2 x 1" BSP(M)
Priming port*	1 x 1½" BSP(M)

*NPT thread available on request
^1 x 1½" & 2 x 1" NPT outlet tee available on request

ENGINE SPECIFICATIONS		
Engine Brand	Honda	
Engine model	GX270E	GX390E
Twin Stage Pump Model	5190HE	5113HE
"Out of box" governed max engine speed @ no load	3800rpm	
Displacement (cc)	270	389
Fuel tank (litres)	6.0	6.5
Approx. fuel consumption @ full load @ 3600rpm	3.05	3.25
Running time per tank @ full load @ 3600rpm	1.9	2.0
Oil capacity (litres)	1.1	
Spark arrestor	Yes	
dBa @ 3600rpm @ full load	79 @ 7m	78 @ 7m

DIMENSIONS (mm)

Model	A	B	C	G	Inlet BSP	Outlet BSP	Priming Port BSP	Dry Weight (kg)
5190HE	507	450	435	155	2"M	2x1"M 1x2"M	1½"M	27.2
5113HE	532	445	455	161	2"M	2x1"M 1x2"M	1½"M	33.5

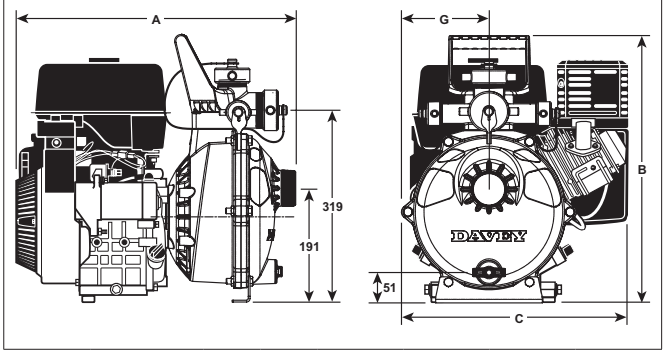

*NOTE: Standard 3 year warranty from point of purchase, and up to 5 years total warranty, when serviced between the start of Year 2 and the end of Year 3 by a registered Davey Service Agent with proof of service.

MATERIALS OF CONSTRUCTION	
PART	MATERIAL
Suction cover	Marine grade aluminium (AS605)
Diffuser	Marine grade aluminium (AS605)
Impeller	Marine grade aluminium (AS605)
Casing / yoke	Marine grade aluminium (AS605)
Mechanical seal	Carbon / ceramic
3 way discharge	Marine grade aluminium (AS605)
Casing bolts	Zinc plated steel
Yoke bolts	Stainless Steel
Flap valve / seal ring	Zinc body, hytrel seal
Neck ring, priming and drain plug	Glass filled nylon
Casing, priming and drain plug o-ring	Nitrile rubber
Discharge gasket	Hytrel
Paint finish	Baked polyester powder coat

HYDRAULIC PERFORMANCE

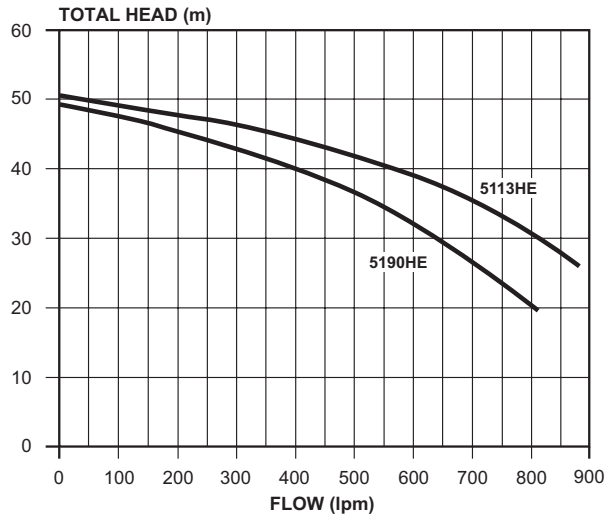

INSTALLATION AND PRIMING

- Fit strainer to bottom of suction pipe; a foot valve is not required.
- To prime, fill pump body with water then allow pump to run until drawing water.

H/O & MFG SCORESBY
Certified System Quality ISO 9001
Certified System Environment ISO 14001

daveywater.com

This literature is not a complete guide to product usage. All images provided in this document are for illustration purposes only. Further information is available from your Davey Dealer, Davey Support Centre and from the relevant product Installation and Operating Instructions. Must be read in conjunction with the relevant product Installation and Operating Instructions and all applicable statutory requirements. Product specifications may change without notice. ® Davey is a registered trademark of Davey Water Products Pty Ltd. © Davey Water Products Pty Ltd 2025.

DAVEY

DWP0121-4/1025