30.2000.00 Vega spr.gun 3/8F-1/4F Bsp
30.2000.50 Vega spr.gun 3/8F-1/4F Npt
30.2000.80 Vega spr.gun 3/8M-1/4F Bsp
30.2030.00 Vega spr.gun+sw.8 3/8F-1/4F Bsp
30.2030.12 Vega spr.gun+sw.8 3/8Fsst.p-1/4F
30.2030.80 Vega spr.gun+sw.8 3/8M-1/4F Bsp
30.2030.85 Vega spr.gun+sw.8 sst.p. 3/8M-1/4F
30.2035.00 Vega+sw8 spr.gun 3/8F-1/4F

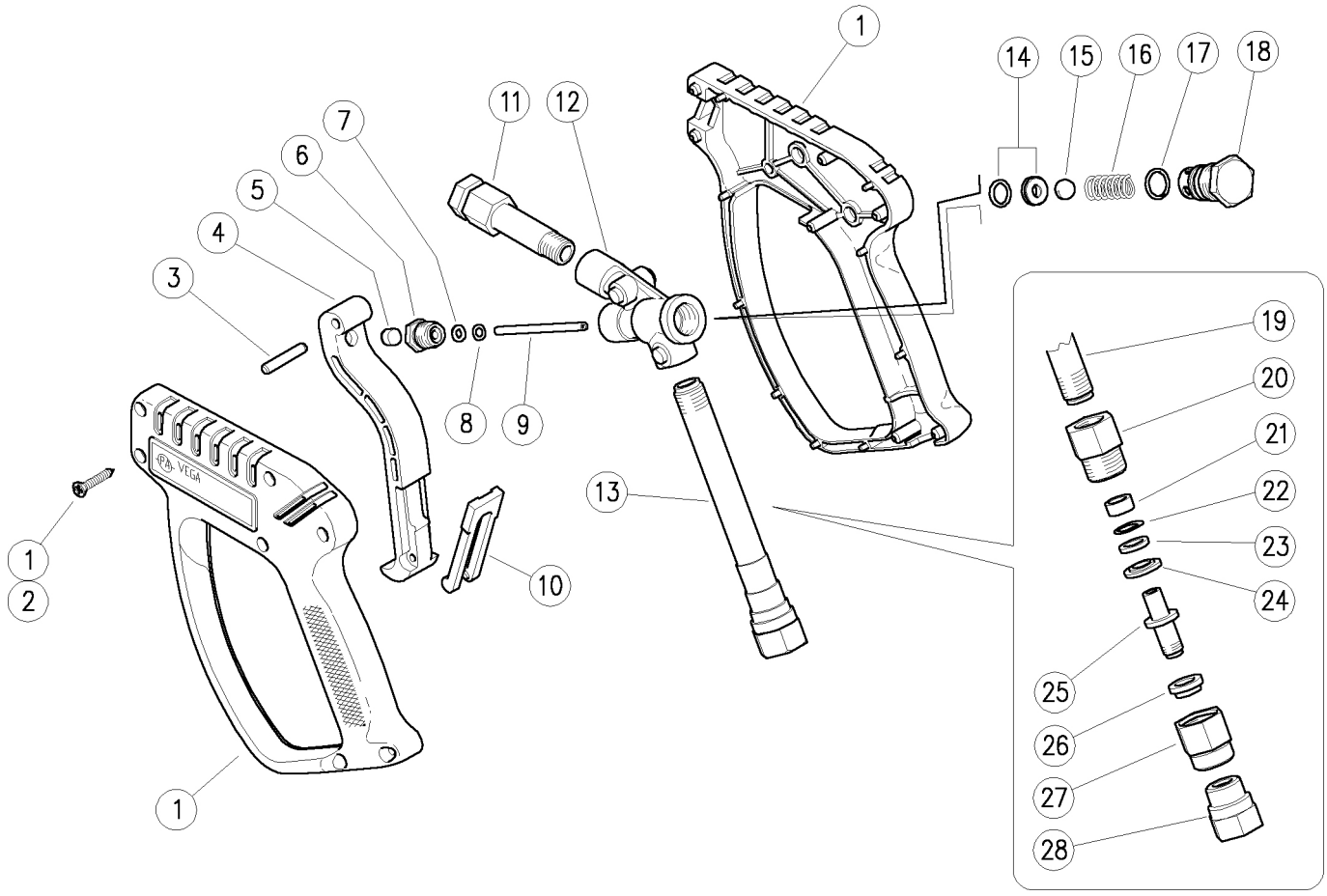

Pos.	P/N	Description	Q.ty	K1	K2	K3	K4	
1	30.2026.24	Casing-kit -VEGA +screws	1					1
2	16.3077.00R	S/tapping screw, DIN7981 3,5x18 mm	7					10
3	30.2517.31R	Parallel pin, 5x27,5 mm brass	1					10
4	30.2506.84R	Trigger -RL31, PA black	1					10
5	30.0675.84R	Stop pin, 8x7,1mm PA	1					10
6	30.4115.31R	Front Plug, M10x1 brass	1					10
7	10.4018.00R	Back-up ring, 3,2x7,5x1,2 mm	1	•		•		10
8	10.3165.00R	O-ring, 2,62x2,84 mm Vi 70	1	•		•		10
9	30.2007.51R	Piston, 3 mm Sst.	1	•		•		10
10	30.1510.84R	Safety latch, PA red	1					10
10	30.1514.84R	Safety latch, PA yellow (1,2,3)	1					10
11	30.2006.35R	Front tube, 1/4F Bsp 72 mm brass	1					5
11	30.2008.35R	Front tube, 1/4F Npt 72 mm brass (4)	1					10
12	30.2005.35R	Housing -VEGA, brass	1					3
13	30.2533.35	Back tube, 3/8F Bsp brass	1					5
13	30.2534.35	Back tube, 3/8F Npt brass (4)	1					5
13	30.1011.36R	Tube, M15 127 mm brass (5)	1					5
13	30.2524.31R	Coupl., 3/8M Bsp brass (5)	1					5

Kit	P/N	Description	
K1	30.2031.24	Spares kit -VEGA, 7x1pcs.	1
K2	30.9326.99R	Kit -Sw8, M15F -3/8F Bsp	10
K3	30.2034.24	Spares kit -VEGA+sw8, 11x1pcs.	1
K4	30.9322.99R	Sw8 M15 -3/8 Bsp FF kit-sst pin	10

Pos.	P/N	Description	Q.ty	K1	K2	K3	K4	
14	30.2014.20R	Seat, 6mm Sst.+O-ring 1,78mm	1	•		•		10
15	14.7443.10R	Ball, 11/32" Sst.	1	•		•		10
15	14.7444.00R	Ball, 11/32" ceramics (3)	1					10
16	30.2003.51R	Spring, 1,6x7x22 mm Sst.	1					10
17	10.3060.01R	O-ring, 1,78x12,42 mm Ni 85	1	•		•		10
18	30.2004.31R	Spring holder, M18x1 brass	1					5
19	30.2532.36R	Tube, M15 94 mm brass (6,1)	1					10
20	30.2531.31R	Coupl., M20x1 M brass	1			•	•	5
21	30.0728.84R	Bushing, 9x13x6 mm plast. black	1			•	•	10
22	10.3109.93R	O-ring, 2,4x8,3 mm Vi 70	1			•	•	10
23	10.4008.50R	Back-up ring, 9x13,2x1,2 mm	1			•	•	10
24	30.0729.31R	Spacer ring, 9x19x3 mm brass	1			•		10
25	30.1553.31R	Pin -SW, M10x1,25 M brass	1			•		5
25	30.1553.51R	Pin -SW, M10x1,25 M sst. (1,2,3)	1				•	3
26	30.0730.84R	Bushing, 10x17x6 mm plast. black	1			•	•	10
27	30.0733.31R	Nipple, M20x1 F brass	1			•		5
28	30.3061.31R	Coupl., M10x1,25F-3/8F Bsp brass (6)	1			•		5
28	30.3066.31R	Coupl., M10x1,25F-3/8M Bsp c/sunk brs. (7,2)	1					5

(1) 30.2030.12 (2) 30.2030.85 (3) 30.2035.00 (4) 30.2000.50 (5) 30.2000.80 (6) 30.2030.00 (7) 30.2030.80