INDUSTRIAL

GENERAL PUMP *A member of the Interpump Group*

HPX Series

Hydraulic Drive - Pressure Intensifier

FEATURES

- Built-in Pressure Regulator
- Heavy-Duty Forged Brass Construction
- Solid Ceramic Plungers
- Innovative Integrated Drive System
- Ultra-High Pressure, Compact Design

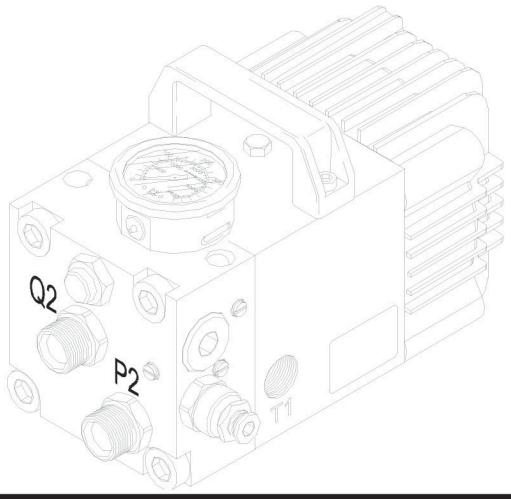

SPECIFICATIONS

Pump Model	HPX808	HPX810	HPX812
Max Discharge Volume	0.6 GPM	1.2 GPM	1.8 GPM
Max Discharge Pressure	11890 PSI	11600 PSI	10150 PSI
Maximum Fluid Temp	110ºF		
Maximum Inlet Pressure	150 PSI		
Minimum Inlet Pressure	45 PSI		
Inlet Port - Water	1/2” G-F		
Outlet Port - Water	1/2” G-F		
Flow Factor	0.1	0.2	0.3
Pressure Factor	6.3	4.0	2.8
Max Hydraulic Input PSI	1885 PSI	2900 PSI	3625 PSI
Max Hydraulic Input Vol*	6.1 GPM		
Min Hydraulic Input Vol	3.2 GPM		
Max Hydraulic Return PSI	145 PSI		
Max Hydraulic Oil Temp	145ºF		
Hydraulic Inlet Port	1/2” G-F		
Hydraulic Outlet Port	1/2” G-F		
Weight	39.6 lb		
Dimensions	9.3” x 4.2” x 5.1”		

*In order to prevent cavitation, the hydraulic input volume values must not be exceeded

PERFORMANCE*

HPX Flow Conversion

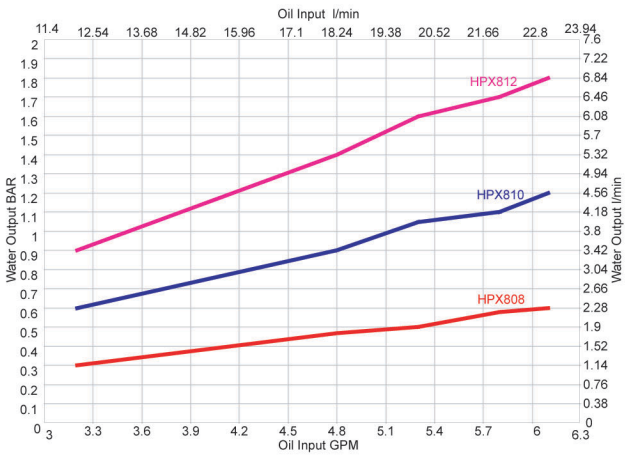

HPX Pressure Conversion

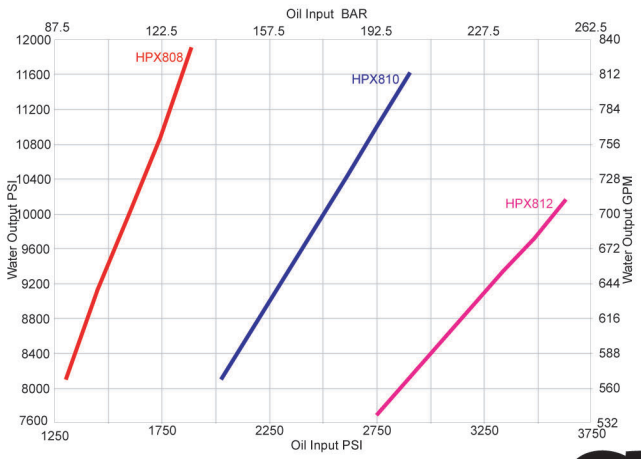

* Actual performance may vary slightly depending on conditions

GENERAL PUMP

INDUSTRIAL

GENERAL PUMP *A member of the Interpump Group*

HPX Series

Hydraulic Drive - Pressure Intensifier

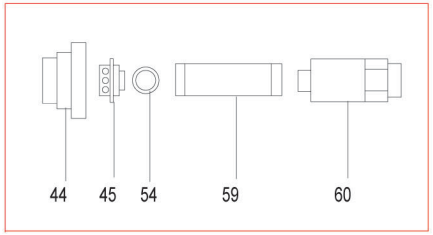

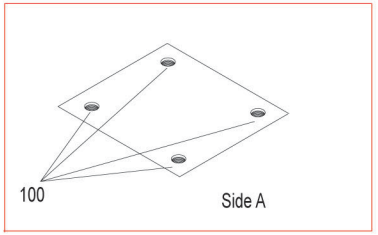

GENERAL PUMP

PART LIST

Pos	Part Num	Description	Qty
1	P03000010	Stainless steel ball Ø 4	3
2	P03300020	Plug M7 x 0.75	3
3	P03300160	Plug 1/4 BSP	1
4	P02100010	O-R 2.5 x 1.5 - 90° Sh	2
5	P03300010	Plug M4 x 5	2
6	P01100090	Upper spacer HPX808	3
	P01100100	Upper spacer HPX810	
	P01100110	Upper spacer HPX812	
7	P00600110	Spacer HPX808	3
	P00600120	Spacer HPX810	
	P00600130	Spacer HPX812	
8,9,10, 11 13,15	P160 P150 P140	HP seals KIT HPX808 HP seals KIT HPX810 HP seals KIT HPX812	1
12	P00600030	Int. bushing HPX808	3
	P00600040	Int. bushing HPX810	
	P00600050	Int. bushing HPX812	
14	P92400070	Complete piston HPX808	3
	P92400060	Complete piston HPX810	
	P92400050	Complete piston HPX812	
16	P02100350	O-R 15.6 x 1.78 - 90° Sh	1
17	P00900070	Overload valve body	1
18	P00800010	Reg. lock nut M12x1 h3	1
19	P03800010	Overload valve screw	1
20	P02100150	O-R 10.5 x 1.5 - 70° Sh	1
21	P01100130	Overload valve spacer	1
22	P01900060	Overload reg. spring	1
23	P92200030	Oerload shutter Ø 2.5	1
24	P02900060	Overload valve seat	1
25	P02100390	OR 32 x1.5	3
26	P01100020	Valve spacer 11.4x10x5	2
28	P03300060	Plug M24 x 1.5 L 24	6
27,29,30	P170	Outlet valve KIT	1

Pos	Part Num	Description	Qty
31	P02100070	O-R 6 x 3 - 90° Sh	1
32	P03700030	Back relief valve	1
33	P01900100	Back relief valve spring	1
34	P02100270	O-R 15.3 x 2.4 - 90° Sh	1
35	P02000020	SS outlet nipple Pg 13.5	1
	P02000040	SS outlet nipple R 1/4"	
36	P03000070	Stainless steel ball 5.5	2
37	P03800020	Bolt STEI M8x1.75xL8	2
38	P01900120	Valve spring	1
39	P03300140	Valve plug	1
40	P03300100	Plug Ø 6.5x8.5	1
41	P01900030	Spring	1
42	P03000050	Stainless steel ball Ø 3.5	1
43	P02100030	O-R 2.78 x 1.78 - 90° Sh	1
44	P03300050	Filter cup	1
45	P01200020	Oil distributor	1
46	P03000030	Stainless steel ball Ø 6	2
47	P03800030	Screw M10x1xL8	2
48	P03800090	Screw M12 x 110	4
49	P01100010	Valve spacer 5.25x10x5	1
50	P02100110	O-R 8.5 x 1.5 - 90° Sh	6
51	P03300080	Plug M10 x 0.75	6
52	P03500060	Brass head	1
25,53,55,56	P050	Oil bushing seals KIT	1
54	P02100380	O R 27x2 70° sh	1
57	P02800010	Washer with gasket Ø 8	1
58	P03300030	Plug M8 x 0.75	1
59	P01300010	Sieve	1
60	P00900010	Filter w/OR (P02100310)	1
61	P00900020	Brass housing	1
62	P02100050	O-R 4 x 3 70 sh	1
63	P02100140	O-R 10 x 1.3 - 90° Sh	1
64	P02900070	Ventil valve seat	1

Pos	Part Num	Description	Qty
65	P03000080	Ball Ø 7	2
66	P01900140	Ventil valve spring	1
67	P03300200	Ventil valve plug	1
68	P03000090	Ball Ø 8.5	1
69	P01900130	Oil inlet safety spring	1
70,71,72	P180	Oil seal KIT	1
73	P02100540	OR 17.17x1.78 90° sh	1
74	P03300230	Plug 1/4"	1
75	P02100420	OR 86 x 2 - 70° Sh A	1
76	P03900010	Swaying disk	1
77	P03300110	Plug pg 9	1
78	P00600180	Oil seal bushing	3
79	P01100120	Sync shaft spacer	3
80	P03600010	Turcon-Glyd Ø 12	3
81	P00600010	Sync shaft guide	3
82,83,84	P085	Piston retainer KIT	1
85	P02700010	Shim 68 x 55 x 0.1	a/r
	P02700020	Shim 68 x 55 x 0.2	a/r
	P02700030	Shim 68 x 55 x 0.3	a/r
86	P02600020	Bearing th. 4mm	1
87	P02600010	Niddle bearing	2
88	P02600030	Flat bearing	3
89,90	P92300020	Swash plate assembled	1
91	P03200010	Pin Ø 4x8	2
92	P03800070	Screw M8 x 080	4
93	P01000020	Brass bottom	1
94,95	P85400120	Oil distribution KIT	1
96	P00200050	Back ring 25x19.3x1.5	1
97	P02100330	O-R 19 x 3 - 90° Sh	1
98	P01900040	Sliding ball spring	1
99	P01200010	Brass oil distributor	1
100		Fixing holes	4

REPAIR KITS

Kit No.	P050	P085	P140	P150	P160	P170	P180
Model	All	All	HPX812	HPX810	Hpx808	All	All
Items included in kit	25, 53, 55, 56	82, 83, 84	8, 9, 10, 11, 13, 15	8, 9, 10, 11, 13, 15	8, 9, 10, 11, 13, 15	27, 29, 30	70, 71, 72
Pcs. in kit	1	1	1	1	1	1	1

TORQUE SPECS*

Item	Kg	Ft/lb	Nm
3	2.5	18	25
19	.75	5	7
28	4	29	39
48	9	65	88
92	3.25	23	32

*Decrease torque by 20% if threads are lubricated.

GENERAL PUMP

DIMENSIONS

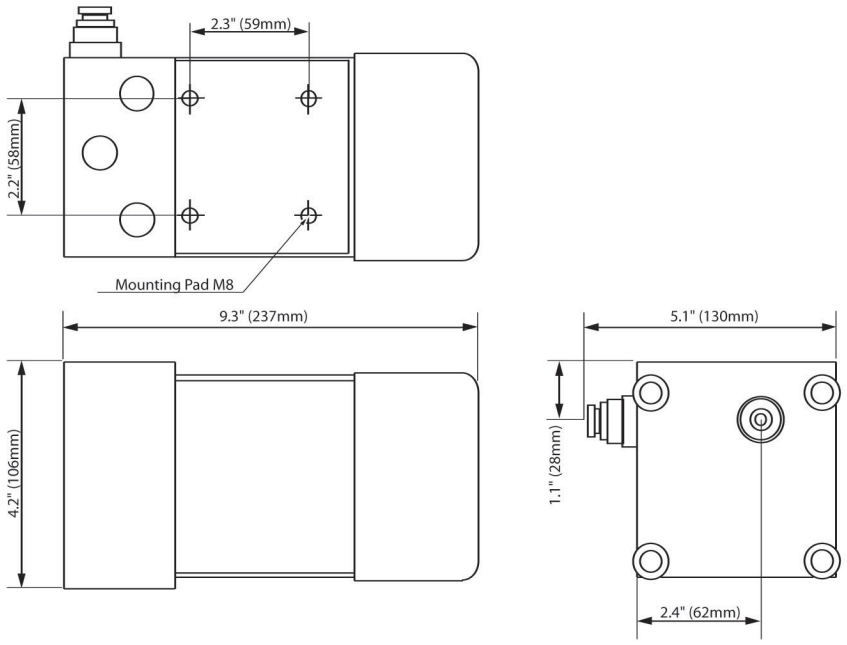

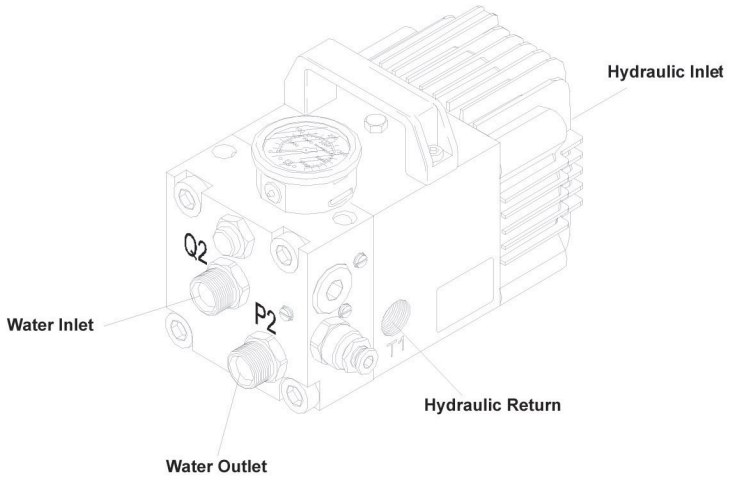

NOTES

Each pump is factory tested for 20 minutes prior to shipment. A serial number is stamped on each pump as an identification code. A label reporting technical data and max working parameters is affixed to each pump. Quality control tests and calibrates each pump to the following specifications.

Model	Inlet Oil Flow	Outlet Water Flow	Oil Inlet PSI	Water Outlet PSI
HPX808	6 GPM	0.6 GPM	1740 PSI	10875 PSI
HPX810	6 GPM	1.2 GPM	2900 PSI	11600 PSI
HPX812	6 GPM	1.8 GPM	3480 PSI	9715 PSI

Ref 300517 Rev.B
07-05

GENERAL PUMP **1174 Northland Drive Mendota Heights, MN 55120**
Phone: (651)686-2199 FAX: (800)535-1745 e-mail: sales@gpcompanies.com www.generalpump.com