DAVEY



DAVEY

HM Series

Model Number:
HM60-06, HM60-08, HM60-10, HM90-08, HM90-11, HM90-13, HM160-15, HM160-19, HM270-19, HM270-25

GUARANTEE
2 YEARS

APPLICATIONS

Specific applications include water supply, boosting and transfer, irrigation and turf watering, wash down, emptying/filling reservoirs or tanks, Water treatment (demineralisation, filtering etc) and commercial washing equipment.

HORIZONTAL MULTISTAGE PUMPS

FEATURES & BENEFITS

Horizontal multistage centrifugal pump with all hydraulic parts in stainless steel:
- Suitable for high water temperatures
- Corrosion and wear resistant

Axial suction and vertical discharge:
- Compact design
- Easy to install

Stainless steel impellers with high efficiency impeller profile and thick self-centring impeller neck rings for:
- High efficiency
- Reduced power consumption:
- Low noise output

Air purging valve and stage porting:
- Easier priming
- Less susceptible to air leaks
- Improved dependability

Impellers mounted directly on extended motor shaft:
- Maximise performance per stage
- High efficiency
- Long motor and pump life
- Increased wear resistance

Pump casing assembly attached to motor bracket at 8 points with o-ring seal:
- Complete stainless casing
- Better sealing
- Longer service life

Davey built, totally enclosed fan cooled (TEFC) electric motor:
- Single-phase motors have built in thermal overload protection with automatic reset and 1.8m long power lead and Australian 3 pin plug
- Sealed and greased for life motor bearings
- Over sized drive bearing
- Longer life
- Easy service
- Economical & quiet running

Automatic control options: Davey Torrium standard pressure switch and gauge multiple pump system
- Versatile system design
- Simple automatic control
- Suitable for many applications

Horizontal Multistage Pumps

DAVEY

HYDRAULIC PERFORMANCE

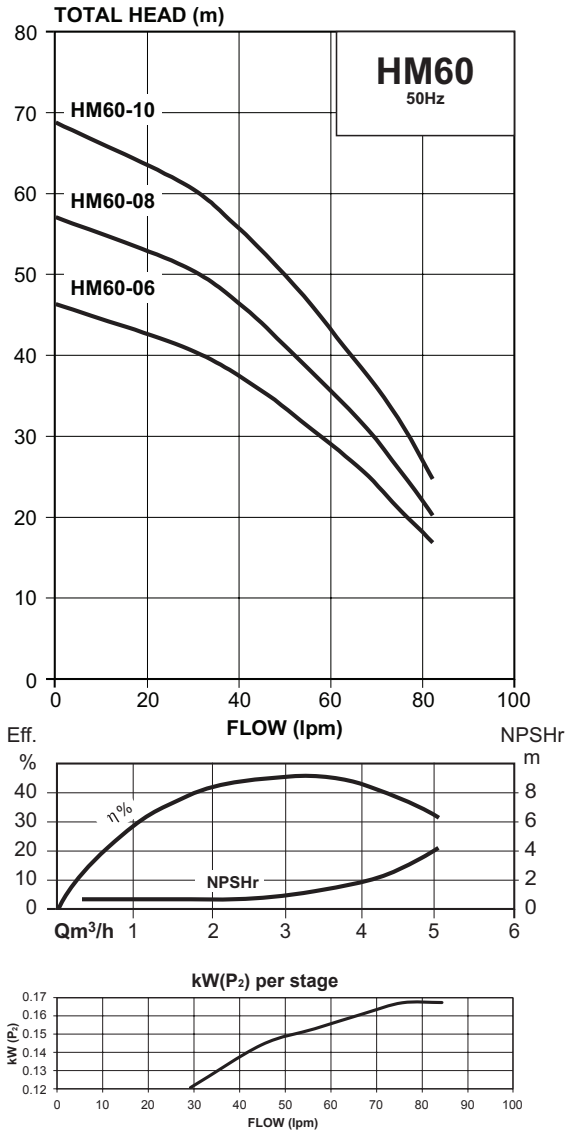

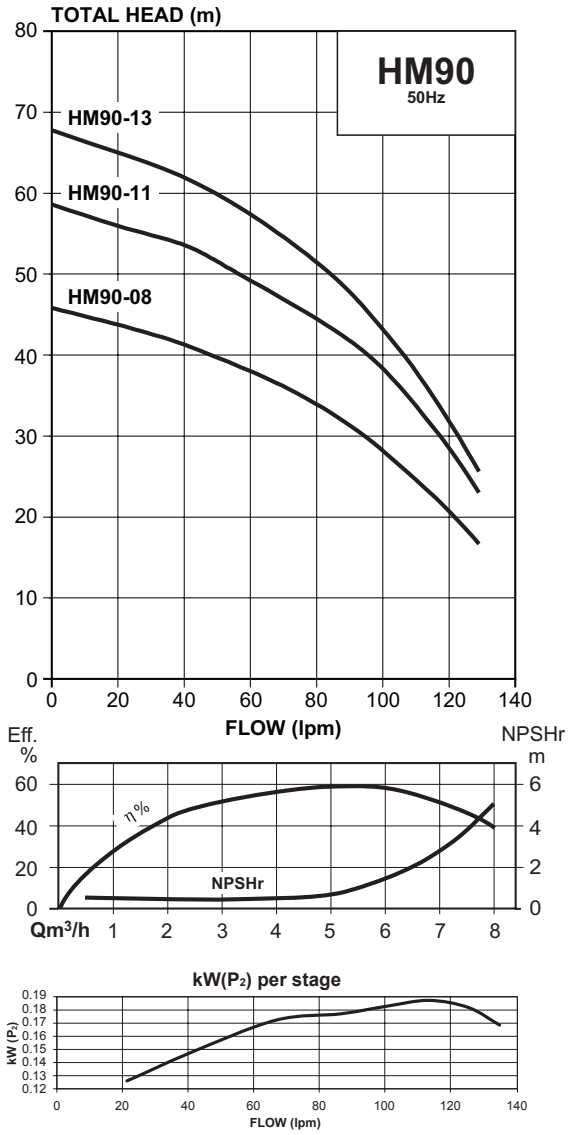

Models	HM60-06/HM90-08	HM60-08/HM90-11	HM60-10/HM90-13
Stages	4	5	6

OPERATING LIMITS	
Capacities up to	430 lpm (26m³/hr)
Pressure heads up to	65m
Maximum operating pressure	1,000kPa
Maximum suction pressure	600kPa
Water temperature range	-15° to 105°C
Maximum ambient temperature	50°C

Suitable fluids
Clean, clear, non-corrosive, non-flammable liquids with no fibres and little sand/sillica or abrasives (maximum concentration 40g/m³).

MATERIALS OF CONSTRUCTION	
PART	MATERIAL
Casing	304 stainless steel
Impellers	304 stainless steel
Stages (casing)	304 stainless steel
Pump shaft	316L stainless steel
Stage centring device	304 stainless steel
Mechanical seal: Rotating Stationary Spring Bellows	 Carbon Ceramic 316SS EPDM
O-rings	EPDM
Plugs	316L stainless steel
Motor shell & lantern bracket	Aluminium with baked polyester powder coat finish
Motor feet	Xenoy
Fan cowl / rear foot (models up to 1.05kW)	Polypropylene

Horizontal Multistage Pumps

DAVEY

HYDRAULIC PERFORMANCE

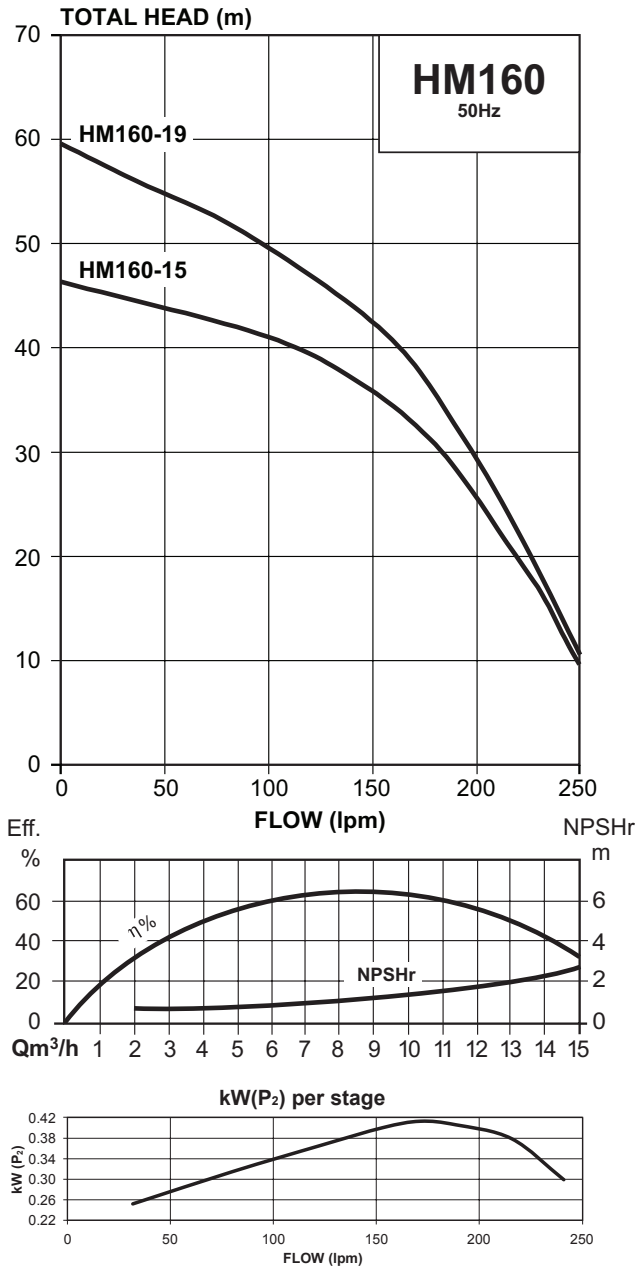

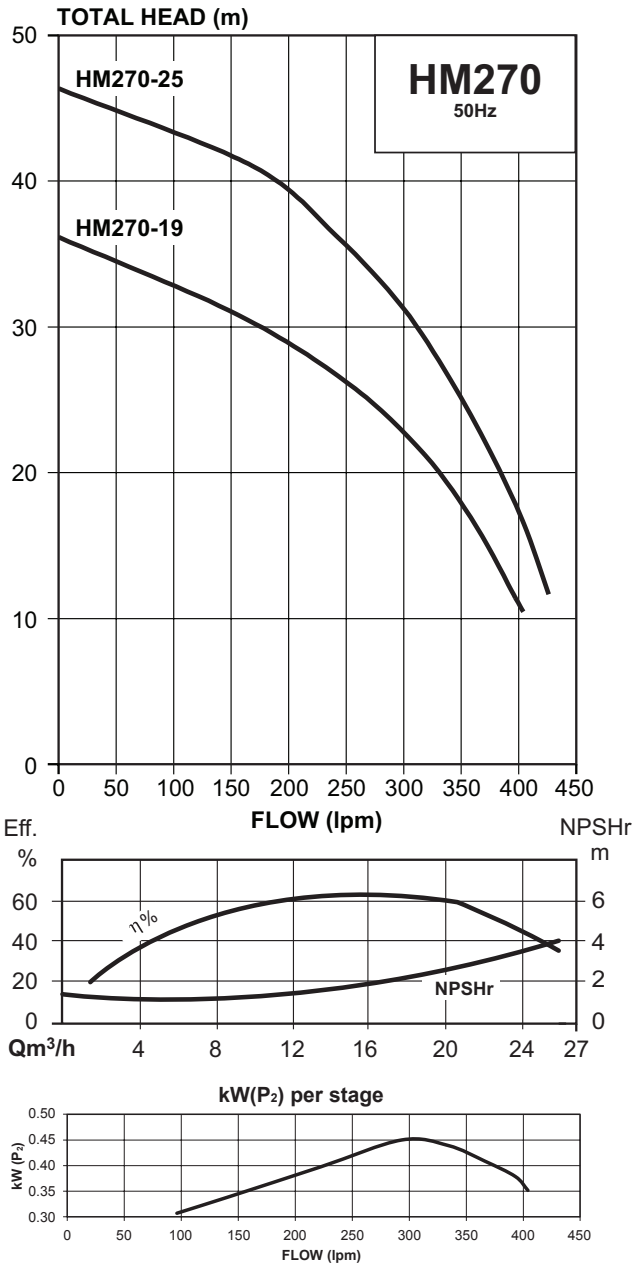

Models	HM270-19	HM160-15/HM270-25	HM160-19
Stages	4	5	6

ELECTRICAL DATA	
Speed	2900rpm
Supply Voltage Single phase Three phase (selected models)	 230V ±10% 415V ±10%
Supply frequency	50Hz
Enclosure class HM60-06, HM60-08, HM60-10, HM90-08 & HM90-11 All other models	 IP55 IP56
Insulation class	Class F

IDENTIFICATION OF THE PUMP

HM 160 - 19 / 3

- Voltage/phase
  Blank = Single phase 50Hz
  /3 = Three phase 50Hz
- Output kW (P_2) x 10
- Flow @ BEP (lpm)
- Code indicating
  HM Series
  Horizontal Multistage
  Stainless Steel Pump

Horizontal Multistage Pumps

DAVEY

DIMENSIONS

Models
HM60-06
HM60-08
HM60-10
HM90-08
HM90-11

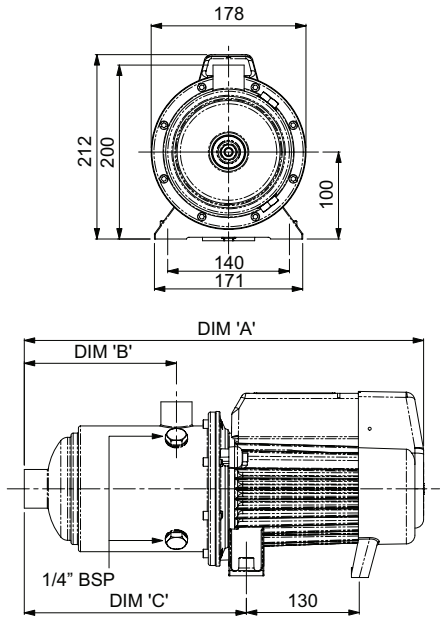

Models
HM90-13
HM160-15
HM160-19
HM270-19
HM270-25

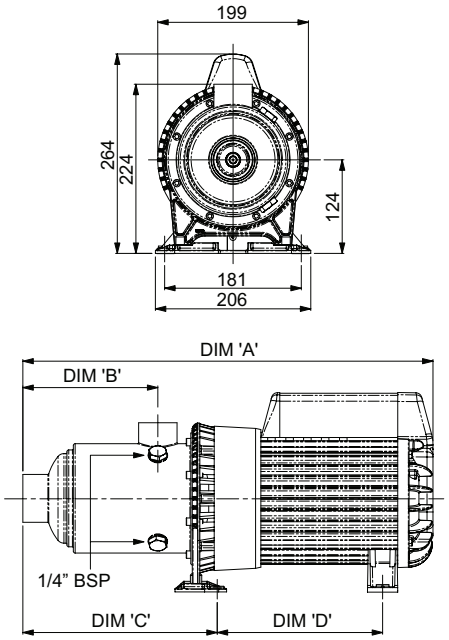

240V Single Phase Models

Model	Motor				Ports		Pump Dimensions				Weight kg
	Input P_1 kW	Output P_2 kW	Amps		Suction BSP	Discharge BSP	DIM 'A' mm	DIM 'B' mm	DIM 'C' mm	DIM 'D' mm	
			Run	Start							
HM60-06	0.85	0.58	4	18	1¼"	1"	411	127	207	-	11.3
HM60-08	1	0.72	4.5	18	1¼"	1"	459	175	255	-	12.2
HM60-10	1.25	0.94	5.9	28	1¼"	1"	459	175	255	-	17.0
HM90-08	1.1	0.78	4.9	20	1¼"	1"	411	127	207	-	11.7
HM90-11	1.4	1.05	6.5	28	1¼"	1"	459	175	255	-	16.4
HM90-13	1.7	1.4	7.2	40	1¼"	1"	502	175	247	189	22.2
HM160-15	1.9	1.5	8	40	1½"	1¼"	509	178	254	189	21.8
HM160-19	2.3	1.8	9.7	40	1½"	1¼"	540	178	254	189	22.1
HM270-19	2.4	1.9	10	40	2"	1½"	512	178	257	189	24.0
HM270-25	3.2	2.5	13.8	66	2"	1½"	562	178	257	239	31.3

415V Three Phase Models

Model	Motor				Ports		Pump Dimensions				Weight kg
	Input P_1 kW	Output P_2 kW	Amps		Suction BSP	Discharge BSP	DIM 'A' mm	DIM 'B' mm	DIM 'C' mm	DIM 'D' mm	
			Run	Start							
HM60-06/3	0.75	0.58	1.9	13	1¼"	1"	411	127	207	-	11.3
HM60-08/3	0.85	0.72	2.1	13	1¼"	1"	459	175	255	-	12.2
HM60-10/3	1.25	0.94	3.2	20	1¼"	1"	459	175	255	-	17.0
HM90-08/3	1.1	0.78	2.2	13	1¼"	1"	411	127	207	-	11.3
HM90-11/3	1.4	1.05	3.3	20	1¼"	1"	459	175	255	-	16.4
HM90-13/3	1.6	1.4	3.1	24	1¼"	1"	502	175	247	189	22.2
HM160-15/3	1.8	1.5	3.2	24	1½"	1¼"	509	178	254	189	21.8
HM160-19/3	2.1	1.8	3.6	24	1½"	1¼"	540	178	254	189	22.1
HM270-19/3	2.3	1.9	3.8	24	2"	1½"	512	178	257	189	24.0
HM270-25/3	2.95	2.5	4.9	30	2"	1½"	562	178	257	239	27.8

H/O & MFG SCORESBY
Certified System Quality ISO 9001
Certified System Environment ISO 14001

daveywater.com

This literature is not a complete guide to product usage. All images provided in this document are for illustration purposes only. Further information is available from your Davey Dealer, Davey Support Centre and from the relevant product Installation and Operating Instructions. Must be read in conjunction with the relevant product Installation and Operating Instructions and all applicable statutory requirements. Product specifications may change without notice.
® Davey is a registered trademark of Davey Water Products Pty Ltd. © Davey Water Products Pty Ltd 2024.

DAVEY

DWP0284-6/0324