GENERAL PUMP

HF

Repair Manual



Ref 300623 Rev.A
01-12

INDEX

1. INTRODUCTION . . . . . Page 3

2. REPAIR INSTRUCTIONS . . . . . Page 3
2.1 Crank Mechanism Repair . . . . . Page 3
2.1.1 Crank Mechanism Disassembly . . . . . Page 4
2.1.2 Crank Mechanism Assembly . . . . . Page 5
2.1.3 Disassembly / Assembly of Bearings and Shims . . . . . Page 6
2.2 Fluid End Repair . . . . . Page 9
2.2.1 Disassembly of the Head - Valve Units . . . . . Page 9
2.2.2 Head Assembly - Valve Units . . . . . Page 11
2.2.3 Disassembly of the Head - Seals . . . . . Page 12
2.2.4 Plunger Unit Disassembly . . . . . Page 14
2.2.5 Head Assembly - Seals - Plunger Unit . . . . . Page 14

3. SCREW CALIBRATION . . . . . Page 15

4. REPAIR TOOLS . . . . . Page 16

5. MAINTENANCE LOG . . . . . Page 17

1. INTRODUCTION

This manual describes the instructions for Repairing HF Series pumps, and must be carefully read and understood before performing any repair intervention on the pump. Correct use and adequate maintenance is fundamental for the pump's regular operation and long wear. General Pump declines any responsibility for damage caused by the misuse or the non-observance of the instructions described in this manual.

2. REPAIR INSTRUCTIONS



2.1 Crank Mechanism Repair

Crank mechanism repair operations must be carried out after draining the oil from the crankcase. To drain the oil, remove the oil dipstick, 1, Fig. 1, and then the draining plug (2, fig. 1).

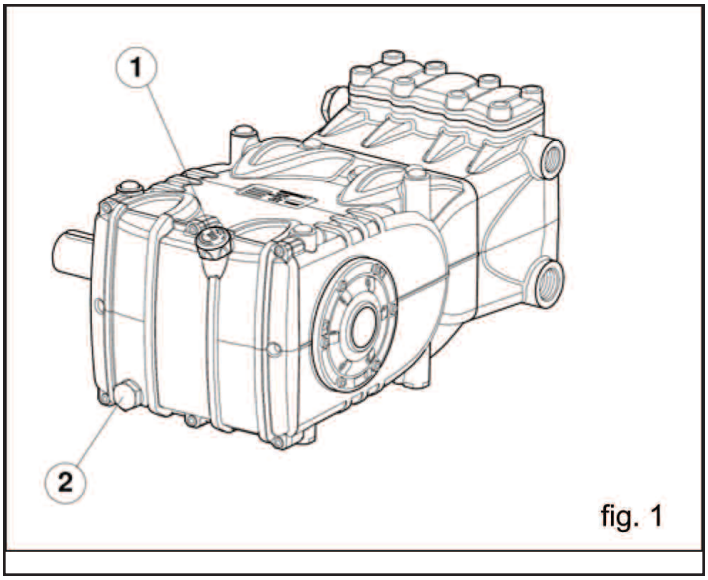

fig. 1



Exhausted oil must be collected in an appropriate receptacle and disposed of in designated locations. In absolutely no case may it be disposed of in the environment.

2.1.1 Crank Mechanism Disassembly

The correct sequence is the following

A) Disassemble:
- pump shaft key
- rear cover
- connecting rod cap
- side covers using 3 wholly threaded M6 x 50 screws, inserting them in the opposite holes as shown in fig. 2



fig. 2

B) Push the plunger guides and connecting rods forward in order to facilitate the lateral extraction of the pump shaft. Two marks are visible on the crankshaft, as shown in fig. 3; they must be turned towards the operator in order to facilitate extraction. **NOTE:** to extract the plunger guide it is necessary to remove the ceramic plunger and wiper first.

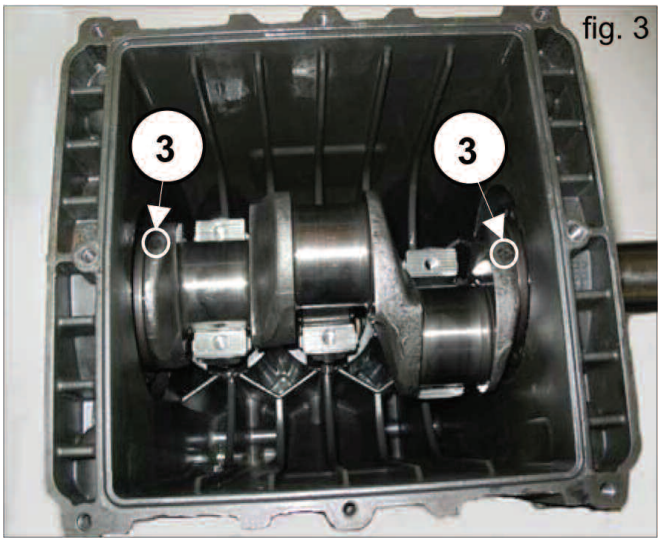

fig. 3

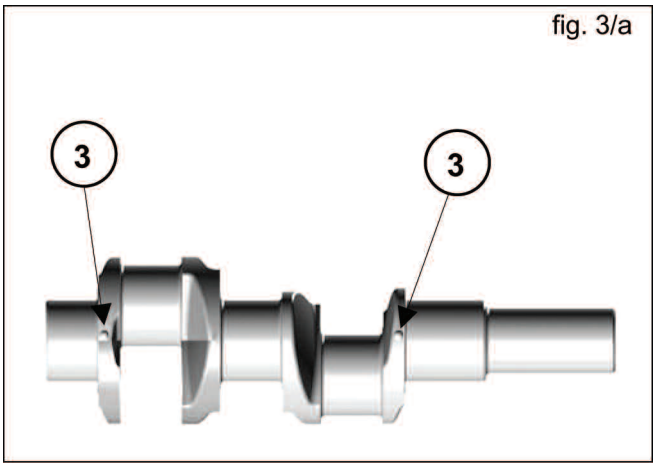

fig. 3/a

C) Disassemble the crankshaft oil seals and the plunger guides using standard tools.

2.1.2 Crank Mechanism Assembly

After cleaning the crankcase, reassemble the crankcase mechanism as follows:

A) Thoroughly fit the plunger guide seals into their seat on the crankcase as shown in fig. 5a, using the appropriate tool (p/n F27904900).

B) Introduce the pre-assembled plunger guide/connecting rod units into their seats; to facilitate tightening of the connecting rod cap, we advise to position the connecting rod so you can easily read the number. To easily insert the crankshaft, without the key, fully push in the plunger guide/connecting rod unit, as indicated in paragraph 2.1.1, Section B, as shown in fig. 4.


fig. 4

C) Before assembly of the side covers, check the seal lips for wear. If replacement is necessary, position the new ring using the appropriate tool (p/n F27904800) as shown in fig. 5.

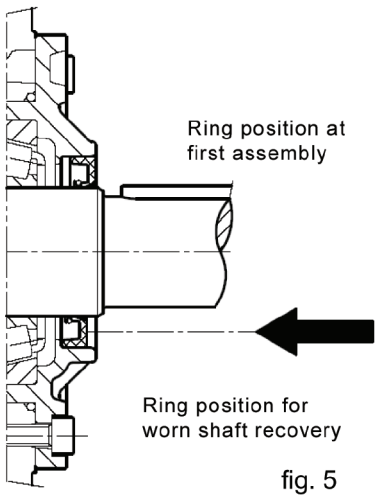

fig. 5

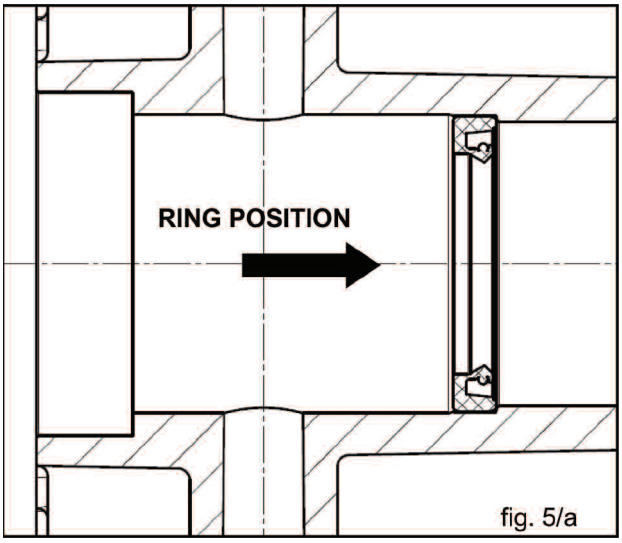

fig. 5/a

If the shaft presents diameter wear corresponding to the sealing lip, to avoid the need for grinding it's possible to position the ring as indicated in fig. 5.

Before assembling the cover (sight glass side), be sure that the shim rings have been inserted. To help the covers fit onto the crankcase, we advise to use 3 screws M6 x 40, and then finish the operation with the screws supplied (M6 x 18) as shown in fig. 6.

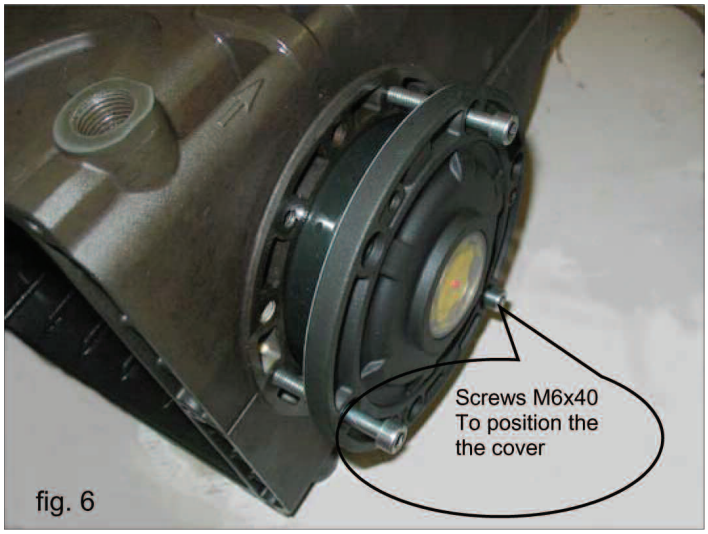

fig. 6

D) Install the connecting rod cap respecting numbering, and fasten the relevant bolts (lubricating both the head and the threaded stem (proceeding in three different steps. See fig. 7:

1. Approaching torque 4.3-7 Ft. Lbs. (6-8 Nm)
2. Pre fastening torque 18.4-21 Ft. Lbs. (25-28 Nm)
3. Fastening torque 28 Ft. Lbs. (38 Nm)

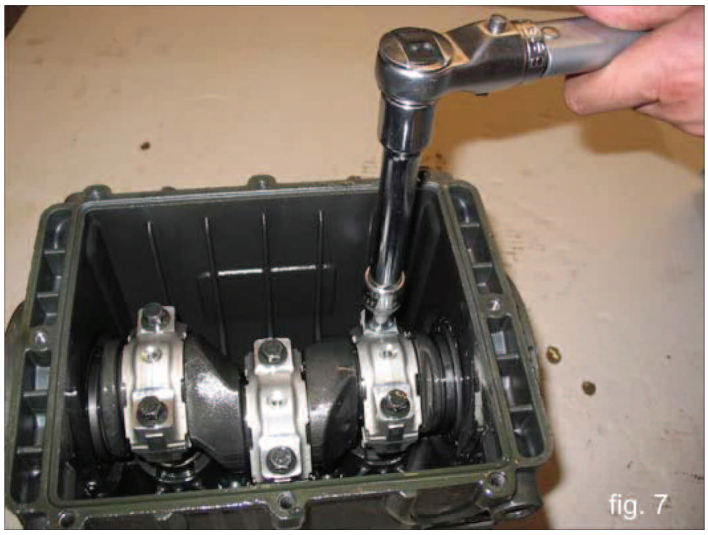
fig. 7

E) Install the rear cover positioning the oil dipstick hole upward.

F) Fill the crankcase with oil as indicated in the use and maintenance manual in paragraph 7.4.

2.1.3 Disassembly / Assembly of Bearings and Shims

The type of bearings used (tapered roller bearings), ensures the absence of axial play on the crankshaft; the shims are to be determined to reach this purpose. To assemble / disassemble, or to replace them if needed, carefully follow the indications below:

A) Assembly / Disassembly of the crankshaft without replacing the bearings

After removing the side covers, as indicated in paragraph 2.1.1, check the rollers and their races for wear; if all parts are in good condition, fully clean the components with a suitable degreaser and grease them again evenly using the same oil in the crankcase. The same shims can be used again, being careful to fit them under the cover on the site glass side. After installing the complete unit (sight glass side flange, shaft and engine side flange), check that the shaft's rolling torque - with the connecting rods free - is at least 3 Ft. Lbs. (4 Nm), Max 5 Ft. Lbs. (7 Nm). To position the two side covers on the crankcase, initially use 3 M6 x 40 screws as shown in fig. 6, and then the fastening screws. The shafts rolling torque (with connecting rods coupled must not exceed 6 Ft. Lbs. (8 Nm).

B) Disassembly / Assembly of the Crankshaft With Bearings Replacement

After disassembling the side covers as indicated in paragraph 2.1.1, remove the outer ring nut of the bearings from their covers and the inner ring nut, with the remaining part of the bearing, from the two shaft extremities using a standard pin extractor or similar tool as indicated in figures 8 and 9.

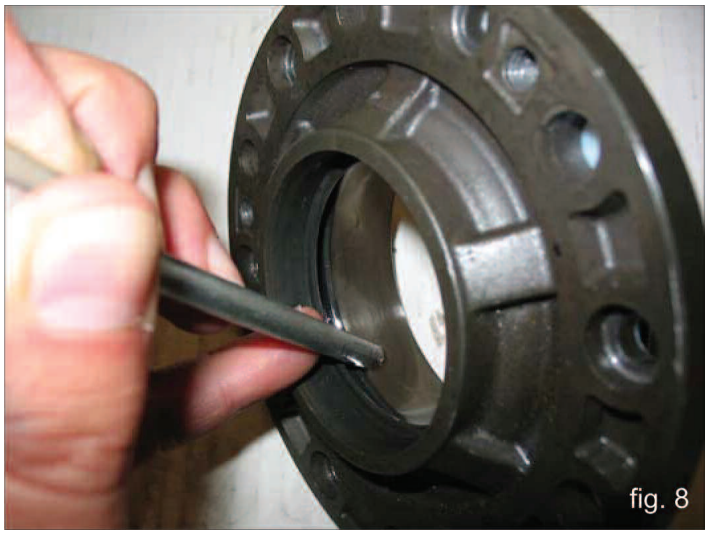

fig. 8



fig. 9

The new roller bearing can be mounted at room temperature with a press or fly press; it is necessary to lay them on the lateral side of the relevant ring nuts with opposite rings. The driving operation can be facilitated by heating the relevant parts to a temperature ranging between 250^0 - 300^0 F, (120^0 - 150^0 C), making sure that the ring nuts are correctly fitted in their seats.

Never invert the parts of the two bearings.

The shim pack must be reassembled as follows:

A) Insert the crankshaft in the crankcase, being sure that the P.T.O. shank comes out of the correct side.

B) Fit the P.T.O. side flange to the crankcase paying close attention to the seal lip as indicated in paragraph 2.1.2, section C.

C) Position the flange on the sight glass side as indicated in paragraph 2.1.2.

D) Use a thickness gauge (see fig. 10).


fig. 10

Determine the shim pack as indicated in the table below:

Measurement	Shim Type	No. of Pieces
From: 0.05 to 0.10	-	-
From: 0.11 to 0.20	0.1	1
From: 0.21 to 0.30	0.1	2
From: 0.31 to 0.35	0.25	1
From: 0.36 to 0.45	0.35	1
From: 0.46 to 0.55	0.35 0.10	1 1
From: 0.56 to 0.60	0.25	2
From 0.61 to 0.70	0.35 0.25	1 1


fig. 11

E) Insert the shims under the cover on the sight glass side (see fig. 11), fixing it to the crankcase using the appropriate screws, and verifying that the stall torque is between 3-5 Ft. Lbs. (4-7 Nm).

F) If the torque value is correct, connect the rods to the crankshaft; otherwise, reposition the shims again repeating the operations from point C.

2.2 Fluid End Repair

2.2.1 Disassembly of the Head - Valve Units

Service operations are limited to valve inspection or replacement if needed, and in any case within the intervals indicated in the table in fig. 14, Chapter 11 of the Owner's Manual. The valve units are assembled inside the head in a vertical position.

For their extraction proceed as follows:

Unfasten the 8 M14 x 40 valve cover screws (fig. 12); using a slide hammer p/n F26019400 extract:

A) the valve plugs (fig 13);

B) the outlet valve units (fig. 14);

C) the valve bushings (fig. 15), also using the tool #F27513600;

D) the inlet valve units (fig 16)

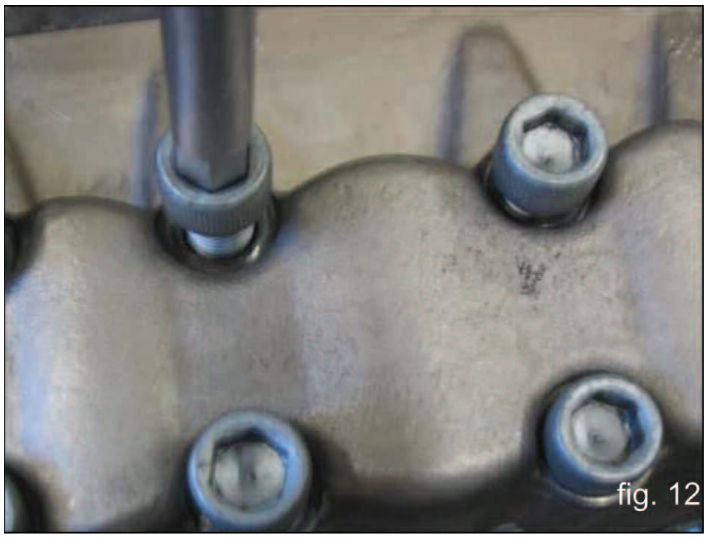
fig. 12


fig. 13

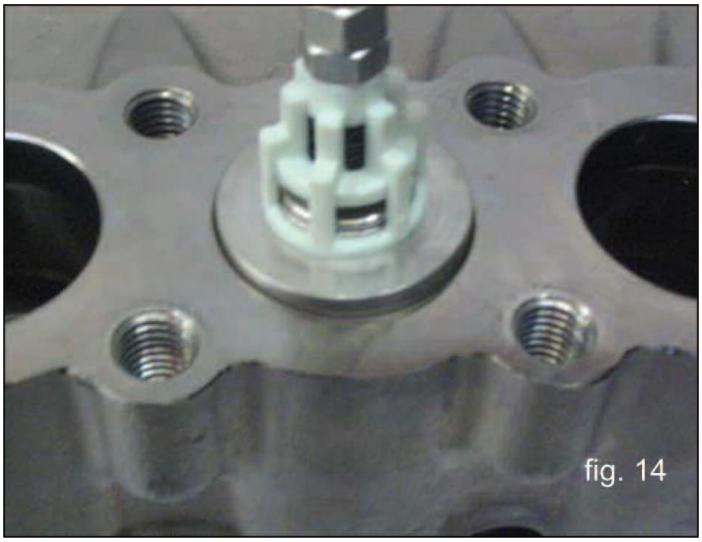
fig. 14

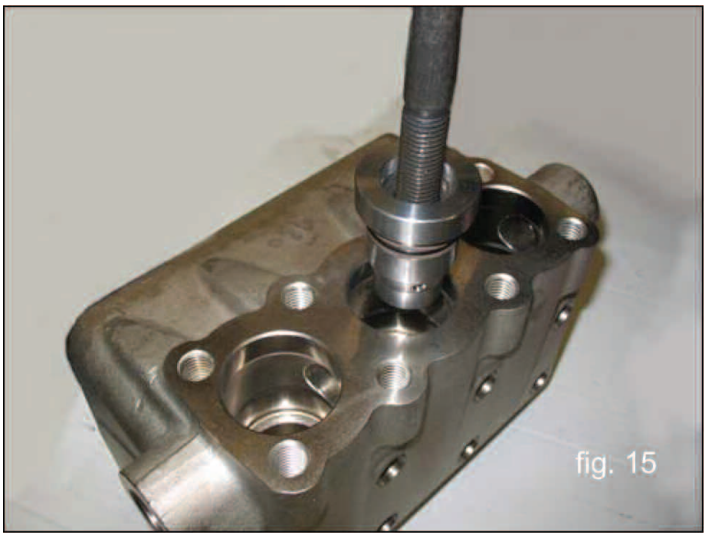
fig. 15

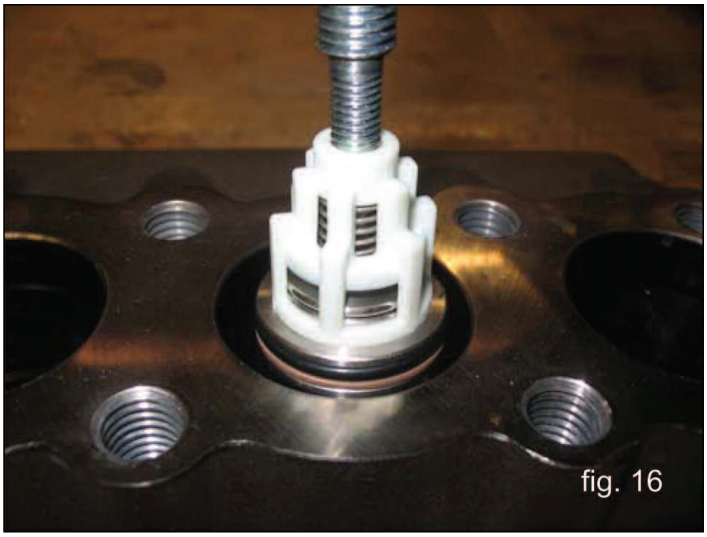
fig. 16

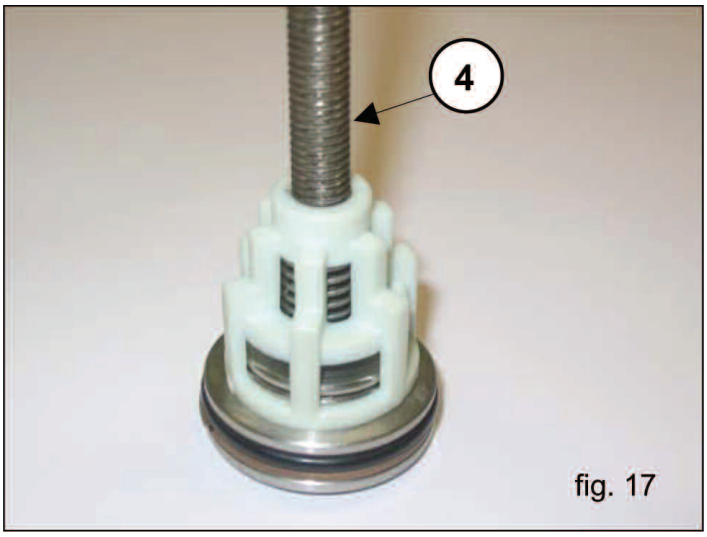

fig. 17

Disassemble the inlet and outlet valve units by screwing on an M8 screw long enough to act on the valve and extract the valve guide from the valve seat (4, fig 17).

If the inlet valve seats remain glued to the head (for example due to incrustation caused by prolonged pump inactivity), operate as follows:

For HF18A version, use tool p/n's F26019400, F27513700 and F27513400 (fig. 18 and fig. 19).

For HF22A and HF25A, use tool p/n's F26019400, F27513700 and F27513400 (fig. 18 and fig. 19).

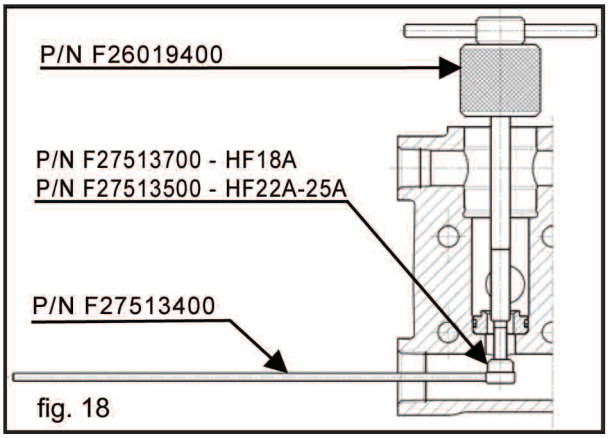

fig. 18

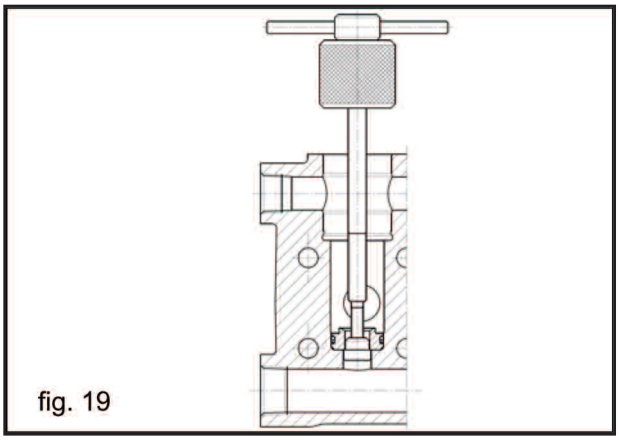
fig. 19

Note: Always slip off the handle p/n F27513400 before extracting the seats.

2.2.2 Head Assembly - Valve Units

Pay careful attention to the state of wear of the various components; replace them when necesary, and in any case within the invervals indicated in the table in fig. 14, Chapter 11 of the Owner's Manual. At each valve inspection, replace all valve unit and valve plug O-rings and anti-extrusion rings.

Before repositioning the valve units, clean and completely dry the relevant seats in the head as indicated in fig. 20.

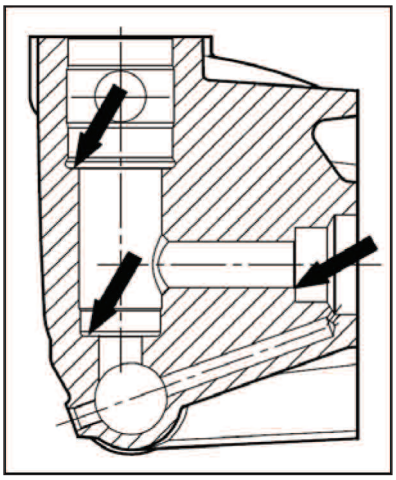

fig. 20

Proceed with reassembly by inverting the procedure indicated in paragraph 2.2.1, paying particular attention to:

1. During the assembly of the inlet and outlet valve units (fig. 21 and 22) do not invert the inlet springs with the previously disassembled outlet springs:
   a) Inlet springs are white
   b) Outlet springs are black

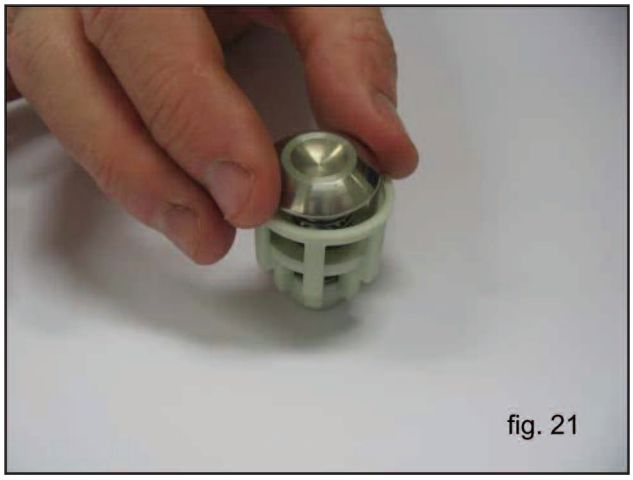

fig. 21

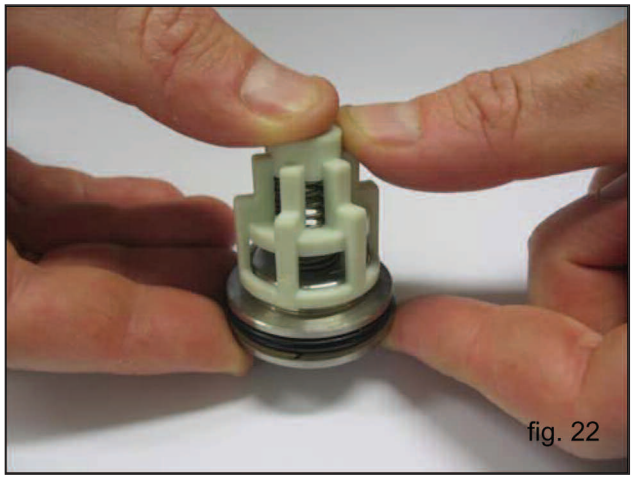

fig. 22

2. Furthermore, for the HF18A version be careful not to invert the sperical inlet valve with the "A" outlet valve (fig. 23 and fig. 24), exploded view position #46, as indicated in Chapter 16 of the Owner's manual

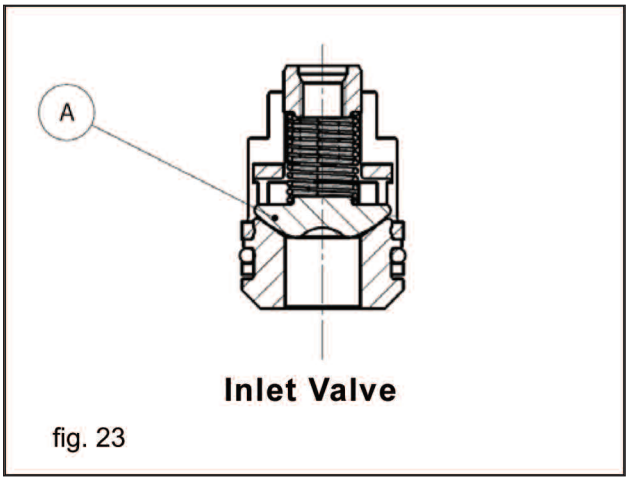

Inlet Valve

fig. 23

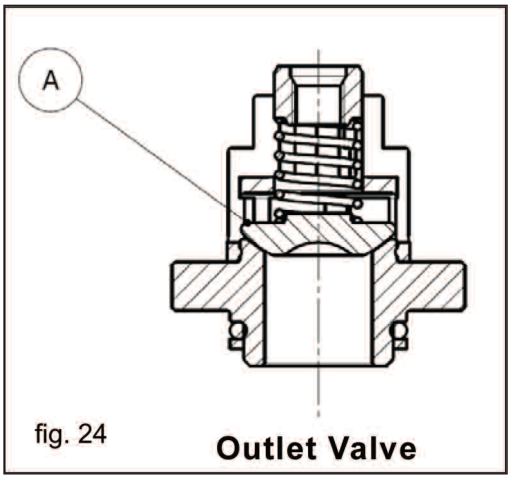

fig. 24 Outlet Valve

Insert the inlet and outlet valve units with their related bushings checking that they are thouroughly inserted in their seat on the head. Therefore apply the valve covers and proceed with calibrating the related M14x40 screws; see the indications in Chapter 3, Screw Calibration.

2.2.3 Disassembly of the Head - Seals

The replacement of the seals is necessary if water leaks are detected from the draining holes located at the rear of the crankcase, and in any case within the intervals indicated in the table in fig. 14, Chapter 11 of the Owner's Manual.

A) Unfasten the M12x150 head screws as shown in fig. 25.



fig. 25

B) Remove the head from the crankcase.

B) Extract the high pressure seals from the head, and the low pressure seals from their related support by using standard tools as shown in 5, fig. 26; be careful not to damage the seats.

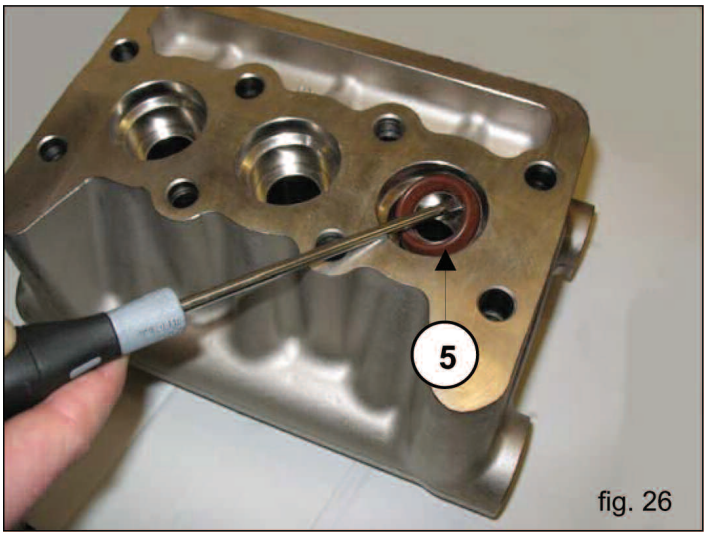

fig. 26

⚠ Pay careful attention to the order of sealing pack disassembly as shown in fig. 27 for HF22A and HF25A version pumps, and fig. 27a for HF18A version composed of:

1. Head ring
2. HP seal
3. Restop ring
4. Packings support
5. LP seal
6. Sealing ring
7, Circlip
8. O-ring

Sealing Packings, version HF22A and HF25A

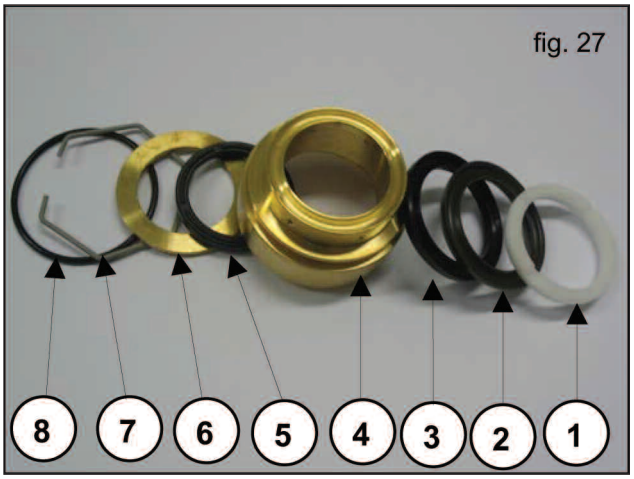

fig. 27

Sealing Packings, version HF18A

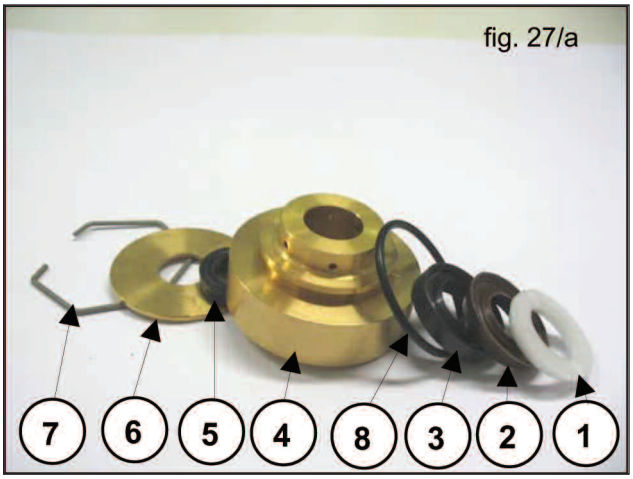

fig. 27/a

2.2.4 Plunger Unit Disassembly

The plunger unit does not require periodic maintenance. Service interventions are limited to visual inspections only. for plunger unit extraction operate as follows:

Unfasten the M7x1 plunger screws as shown in fig. 28.

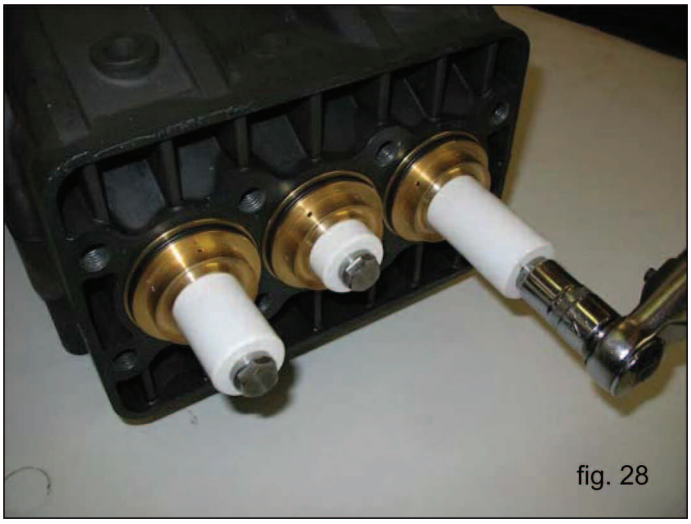

fig. 28

Check them for wear; replace if necessary.

At each disassembly, all the O-rings of the plunger unit must be replaced.

2.2.5 Head Assembly - Seals - Plunger unit

Reassemble the various components by inverting the operations previously listed in paragraph 2.2.3, paying careful attention to the following:

A) Sealing packing: follow the same order used during disassembly.

B) Lubricate components 2,3 and 5 with silicone grease type OCILIS, p/n F12001600; this operation is also considered necessary in order to facilitate the settling of the seal lip on the plunger.

C) For correctly assembling the HP seals in their related seats on the head without damaging the lips, use the appropriate tools depending on the pumping assembly diameters as indicated in Chapter 4.

D) Reassemble the plungers by fastening the screws with a torque wrench, following the fastening torque value indicated in Chapter 3.

E) Reassemble the head proceeding as follows:

1. Position the seal supports in their respective seats on the crankcase;
2. Using two screws - auxiliary pin (p/n F27508200) fastened to the crankcase as indicated in fig. 29, position the complete head, being sure that it is centered on the central plunger only.
3. Complete the operations by following the fastening procedures; for fastening torque values and sequences, follow what is indicated in Cha[ter 3.

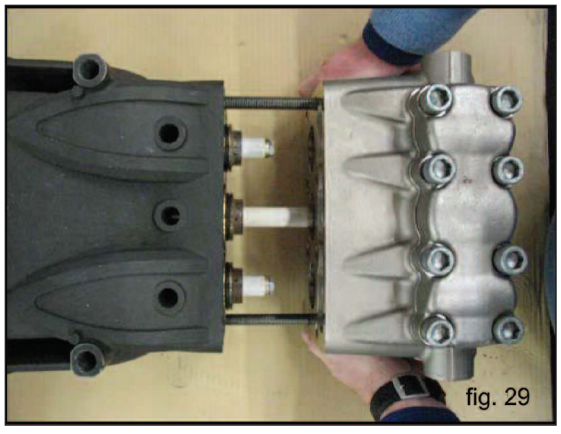

fig. 29

3. SCREW CALIBRATION

Screw calibration by means of a torque wrench only.

Description	Exploded View Position (From Owner's Manual)	Fastening Torque (Ft. Lbs.)	Fastening Torque (Nm)
Cover fastening screws	9	7.4	10
Plunger fastening	29	14.8	20
Conrod caps fastening screws	16	28	38*
Head fastening screws	39	59	80**
Valve cover screws	41	132.8	180***
Lifting bracket fastening screws	63	73.8	100
Oil discharge plug	11	29.5	40

* The conrod caps fastening screws must be tightened respecting the phases indicated in "Point D" of page 6

** The head fastening screws, exploded view position 39 from the Owner's Manual, must be tightened using a torque wrench, lubricating the threaded stem and respecting the order of the scheme in fig. 30.

*** the valve cover screws, exploded position 41 from the Owner's Manual, must be fastened using a torque wrench, lubricating the threaded stem and respecting the order of the scheme in fig. 30.

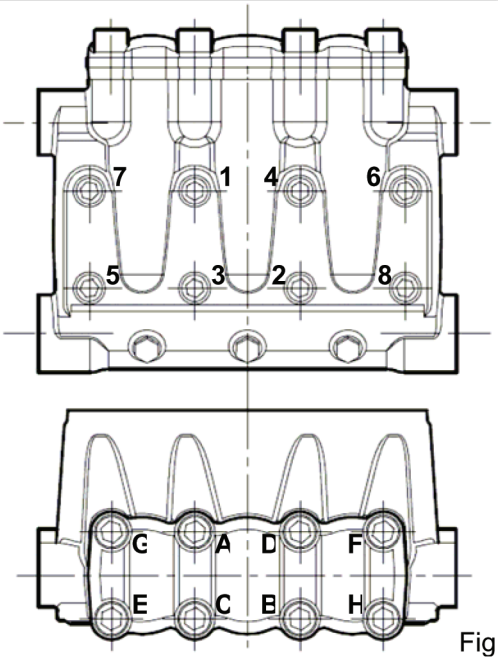

Fig. 30

4. REPAIR TOOLS

Pump maintenance may be carried out using simple tools for assembling and disassembling components. The following tools are available:

For Assembly:

- Gasket Bushing Ø 32; HP alternative seal ring Ø18x32x7/4.5 . . . . . p/n F27472700
- Gasket Bushing Ø 35; HP alternative seal ring Ø22x35x7/4.5 . . . . . p/n F27472800
- Gasket Bushing Ø 38; HP alternative seal ring Ø25x38x7/4.6 . . . . . p/n F27472900
- Gasket Bushing Ø 26; LP alternative seal ring Ø18x26x5.5 . . . . . p/n F27470600
- Gasket Bushing Ø 30; LP alternative seal ring Ø22x30x5.5 . . . . . p/n F27470700
- Gasket Bushing Ø 33; LP alternative seal ring Ø25x33x5.5 . . . . . p/n F27470800
- Pump Shaft Oil Seal Stopper . . . . . p/n F27904800
- Plunger Guide Oil Seal Stopper . . . . . p/n F27904900
- Head Assembly . . . . . p/n F27508200

For Disassembly:

- Valve Bushings . . . . . p/n F26019400
  p/n F27513600
- Suction (Inlet) Valves HF18A version . . . . . p/n F26019400
  p/n F27513700
  p/n F27513400
- Suction (Inlet) Valves HF22A and HF25A versions. . . . . p/n F26019400
  p/n F27513500
  p/n F27513400
- Delivery (Outlet) Valve . . . . . p/n F26019400
- Valve Plugs . . . . . p/n F26019400
- Plunger Guide Oil Seal . . . . . p/n F27503900

COPYRIGHT
The copyright of these operating instructions is property of General Pump/ the Interpump Group. The instructions contain technical descriptions and illustrations that may not be electronically copied or reproduced, entirely or in part, nor distributed to third parties in any form without authorized written permission.

Offenders will be prosecuted according to the laws in force.

MAINTENANCE LOG

	HOURS & DATE						
OIL CHANGE							
GREASE							
PACKING REPLACEMENT							
PLUNGER REPLACEMENT							
VALVE REPLACEMENT							

GENERAL PUMP

GP Companies, Inc.
1174 Northland Drive
Mendota Heights, MN 55120
Phone:651.686.2199 Fax: 800.535.1745
www.generalpump.com email: sales@gpcompanies.com