GENERAL PUMP *A member of the Interpump Group*

GPT3090/GPT30150

Adjustable Thermostats

GPT Adjustable Thermostats provide accurate, rapid response temperature control at pressures to 3000 PSI.



FEATURES

- Panel-mount, dual-scale knob.
- Rapid response: ± 5° F.
- Rated to 3000 PSI.
- 60 inch insulated capillary tube.
- UL/CSA approved.

SPECIFICATIONS

		GPT3090	GPT30150
Part Number	(Individually packaged) (Bulk packaged – Qty 25)	100438 100438B	100439 100439B
Temperature Range	(F) (C)	86 to 194°F ± 5°F 30 to 90°C ± 3°C	86 to 302°F ± 5°F 30 to 150°C ± 3°C
Maximum Pressure		4000 PSI	4000 PSI
Electric Rating		16(4)A – 380V	16(4)A – 380V
Sensing Element		Copper	Copper
UL & CSA Approved		YES	YES

GENERAL PUMP

GPT3090/GPT30150

GENERAL PUMP *A member of the Interpump Group*

Adjustable Thermostats

DIMENSIONAL DRAWING

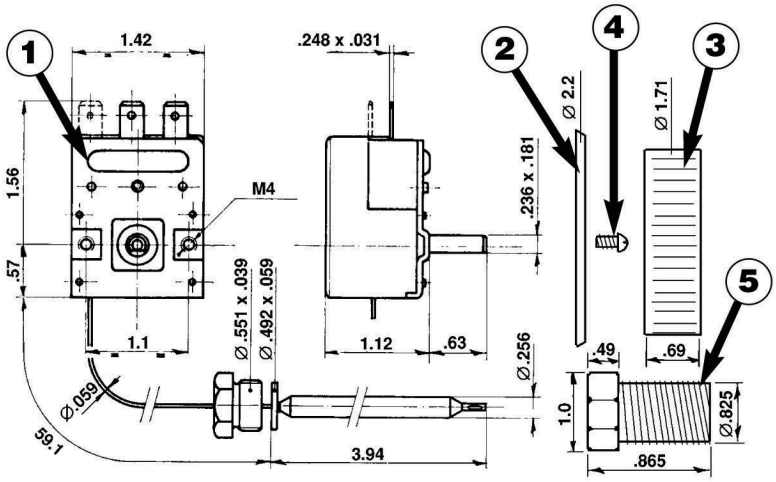

PARTS LIST

No.	Part Num.	Description	Qty.
1.	620106	Thermostat Body, GPT3090	1
	620107	Thermostat Body, GPT30150	1
2.	540019	Bezel	1
3.	660020	Adjusting Knob, GPT3090	1
	660021	Adjusting Knob, GPT30150	1
4.	200001	Screw	2
5.	510103	Adapter	1

WIRING DIAGRAM

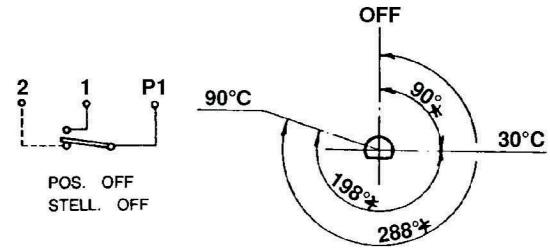

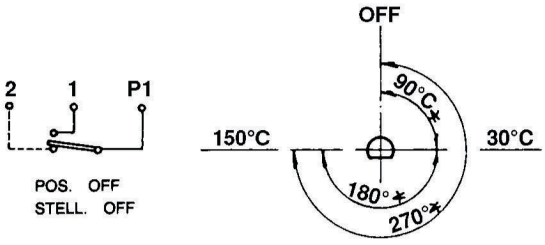

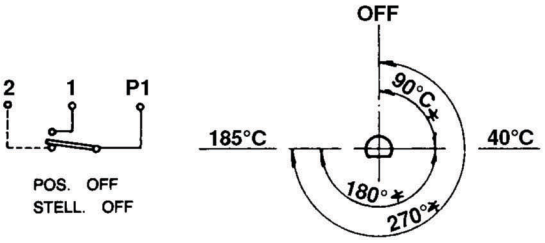

ASSEMBLY INSTRUCTIONS

1. Thread item 5 nipple in desired location.
2. Insert probe through item 5 and thread nut into item 5.
3. Position thermostat body in desired location.
4. Connect electrical wires.
5. Align indentation on bezel with connector end of thermostat.
6. Attach bezel to thermostat with item 4 screws (Qty. 2).
7. Press adjustment knob onto thermostat spindle.

Ref 300550 Rev. A
6/05

GENERAL PUMP 1174 NORTHLAND DRIVE • MENDOTA HEIGHTS, MN 55120
PHONE: (651) 686-2199 • FAX: (800) 535-1745 • e-mail: sales@gpcompanies.com • www.generalpump.com

GENERAL PUMP