Revised 10-1-2005

GD 5.5/30-S

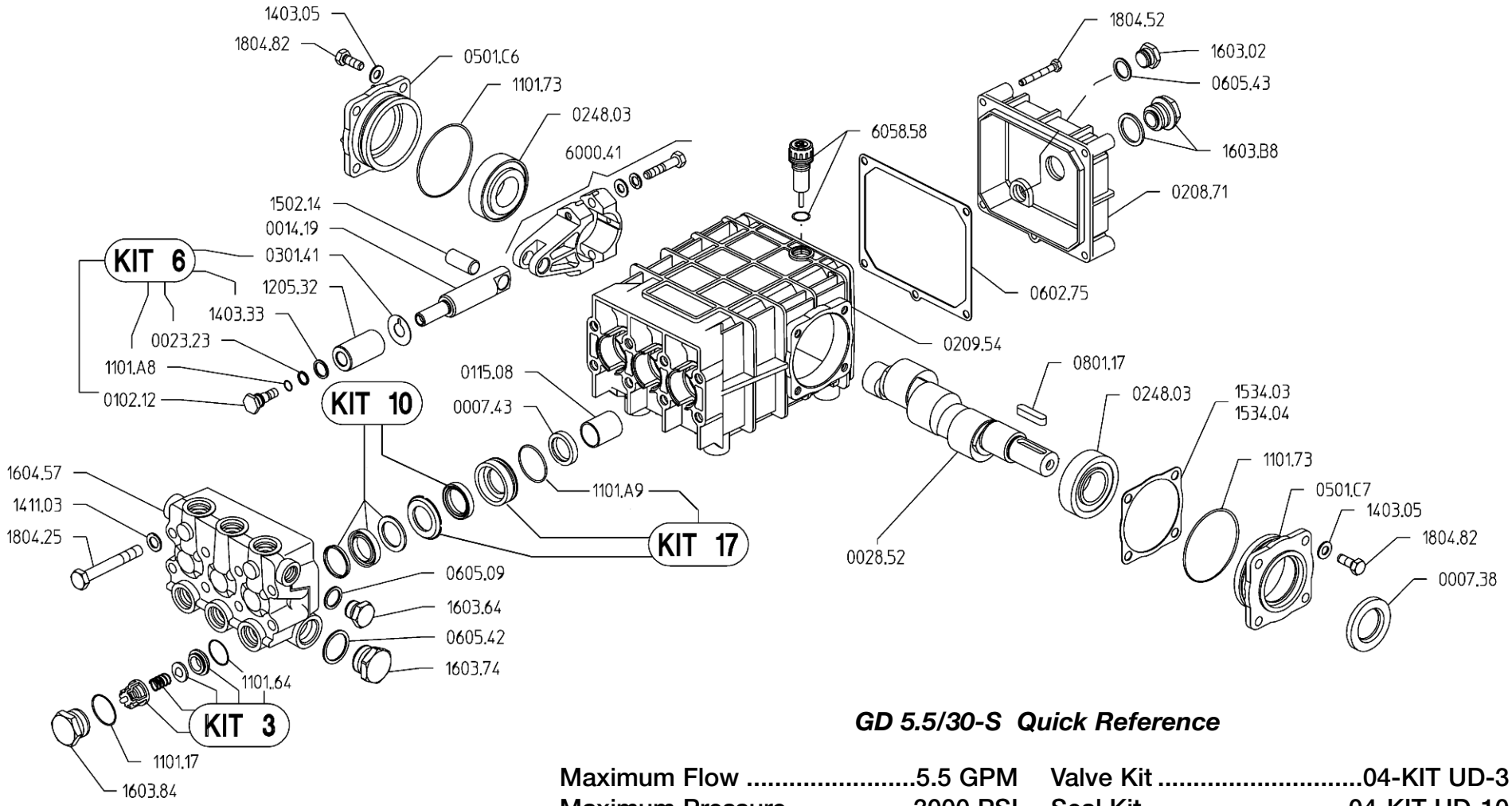

GD 5.5/30-S Quick Reference

Maximum Flow .....5.5 GPM	Valve Kit 04-KIT UD-3
Maximum Pressure .....3000 PSI	Seal Kit.....04-KIT UD-10
Rated Pump Speed .....1750 RPM	Brass Kit 04-KIT UD-17
Oil Capacity.....40 oz. UDOR LUBE	Plunger Bolt Kit 04-KIT UD-6
or SAE 30W	Plunger Part # 04-1205.32
Non-Detergent Oil	Plunger Diameter.....22 MM

PLUNGER PUMPS & ACCESSORIES LIMITED PRODUCT WARRANTY

UDOR Standard Series P, M, G, & Vehicle Cleaning Plunger Pumps are warranted by the manufacturer to the original purchaser to be free from defects in materials and workmanship under normal use and service for a period of five (5) years.

UDOR Industrial Series GAMMA, PENTA, NX, & All Hydraulic Drive Plunger Pumps are warranted by the manufacturer to the original purchaser to be free from defects in materials and workmanship under normal use and service for a period of one (1) year.

UDOR Accessories are warranted to be free from defects in materials and workmanship under normal use and service for a period of ninety (90) days.

"Normal use and service" is defined as applications not in excess of recommended maximum speeds, pressures, temperatures or vacuums, only handling fluids which are compatible with pump or accessory materials and maintaining proper oil change intervals.

"Proper oil change intervals" for Plunger Pumps is changing PUMP OIL after the first 50 hour break-in period, and after every 500 hours of use thereafter using UDOR LUBE Premium Pump Oil.

This Warranty DOES NOT APPLY to freight damage, damage due to freezing, running pump dry or improper lubrication of crankcase, normal wear of moving parts, damage due to misuse or misapplication, or damage due to use of parts or accessories not obtained from or approved by UDOR USA.

This Warranty also does not apply to any pump or accessory which has been altered or modified to affect its performance or reliability.

This Warranty excludes all elastomers, seals and valves as they are considered "normal wear items."

All warranty evaluation returns must be accompanied by the original purchase invoice. If invoice is not included, UDOR USA will determine warranty by manufacturer's serial number and date of manufacture on the pump label.

UDOR USA's obligation under this warranty is limited to repair or replacement of product in question, at UDOR's option, upon return of the product, freight prepaid, to UDOR USA. UDOR USA agrees to be responsible for return shipping costs ONLY on any approved warranty repair or replacement product via ground transportation ONLY. This warranty is in lieu of all other warranties expressed or implied, including any warranty of merchantability.

IN NO EVENT SHALL UDOR USA BE LIABLE FOR ANY INCIDENTAL OR CONSEQUENTIAL DAMAGES OR EXPENSES OF ANY KIND. This includes lost income, travel time and expenses, lodging expenses, labor expenses, down time, shipping costs and any other incidental or CONSEQUENTIAL damages or expenses.

<u>WARNING!</u> - DO NOT PUMP OR FLUSH PUMP WITH FLAMMABLE OR EXPLOSIVE FLUIDS. DO NOT USE ANY OF THESE PRODUCTS IN AN EXPLOSIVE ATMOSPHERE. FAILURE TO FOLLOW THIS WARNING CAN RESULT IN PERSONAL INJURY OR PROPERTY DAMAGE AND WILL VOID ANY AND ALL WARRANTIES.

This Warranty supersedes any and all previous Warranties.

Revised 8-1-2008