GAMMA 85 TS1C

MAX FLOW	22.6 GPM / 85 L/MIN
MAX PRESSURE	870 PSI / 60 BAR
RATED PUMP SPEED	600 RPM
POWER REQUIREMENT	13.5 HP ELECTRIC
LUBRICATION	128 OZ UDOR LUBE

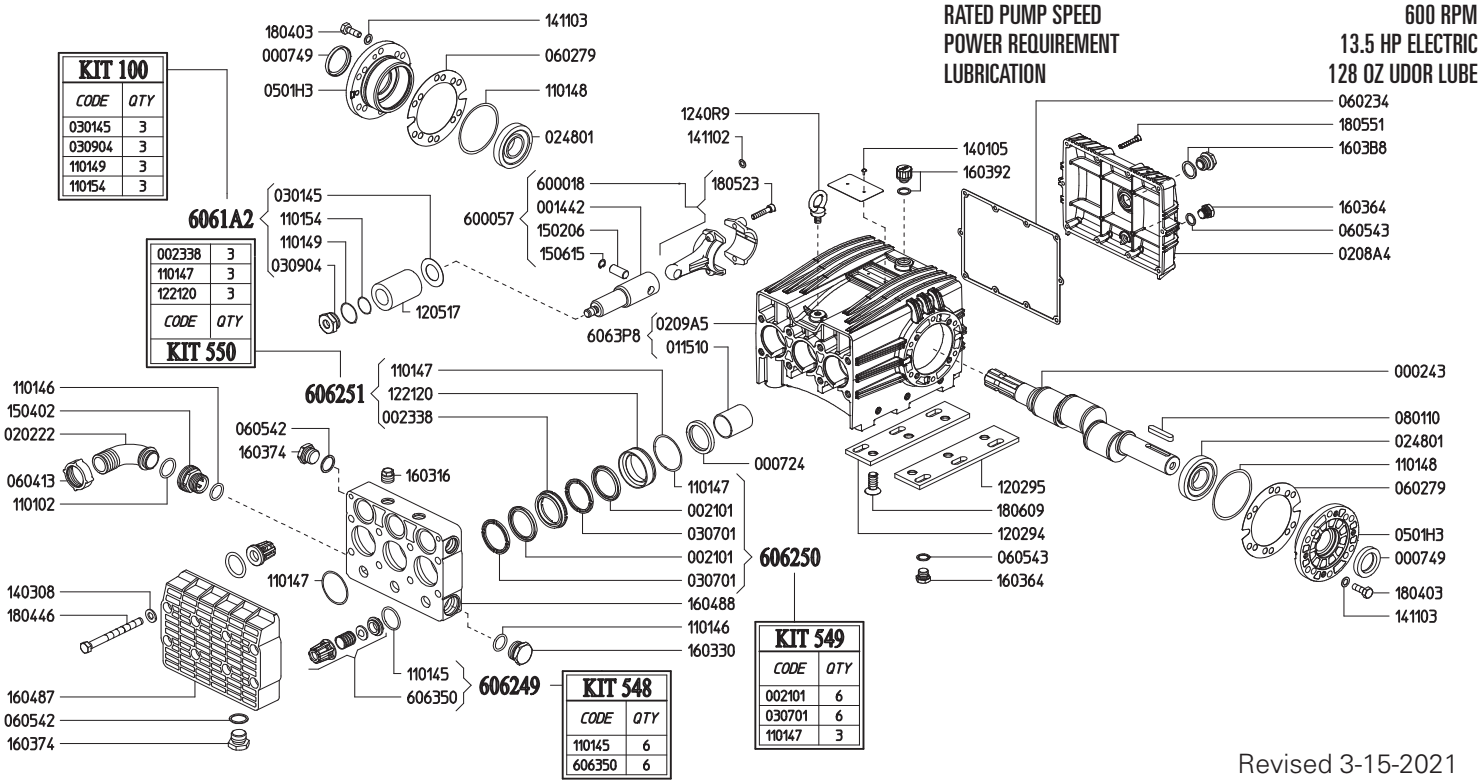

Revised 3-15-2021

Part #	Description	Qty
0002.43	SHAFT TS1C	1
0007.24	OIL SEAL D40	3
0007.49	OIL SEAL D35	2
0014.42	PLUNGER GUIDE	3
0021.01	PISTON SEAL RING D50 [C]	6
0023.38	UPPER RING D50 [D]	3
0115.10	BUSHING D40	3
0202.22	HOSE BARB D36	1
0208.A4	BACK COVER	1
0209.A5	CRANKCASE	1
0248.01	ROLLER BEARING D35	2
0301.45	DISC [A]	3
0307.01	SPACER RING D50 [B]	6
0309.04	NUT D50 [A]	3
0501.H3	BEARING FLANGE	2
0602.34	BACK COVER GASKET	1
0602.79	FLANGE GASKET	2
0604.13	BRASS NUT M46X2	1
0605.42	GASKET D27	3
0605.43	GASKET D17	2
0801.10	KEY A10X8X55	1
1101.02	O-RING - INLET HOSE BARB	1
1101.45	O-RING - VALVE [B]	6
1101.46	O-RING - INLET PORT	2
1101.47	O-RING - SPLIT MANIFOLD	3
1101.47	O-RING - PRESSURE RING [C D]	3
1101.48	O-RING - BEARING FLANGE	2
1101.49	O-RING - PLUNGER BOLT OUTER [A]	3
1101.54	O-RING - PLUNGER BOLT INNER [A]	3
1202.94	LEFT BASE PLATE	1
1202.95	RIGHT BASE PLATE	1
1205.17	CERAMIC PLUNGER D50	3

Part #	Description	Qty
1221.20	PRESSURE RING D50 [D]	3
1240.R9	LIFTING HOOK M10	1
1401.05	RIVET UNI7346-3,5X8	2
1403.08	WASHER D13	8
1411.02	SERATED WASHER D8	6
1411.03	SERATED WASHER D10	8
1502.06	PIN D15X32.3	3
1504.02	BRASS INLET CONNECTOR	1
1506.15	SNAP RING D15	3
1603.16	PLUG G1/2	2
1603.30	PLUG G1"	1
1603.64	PLUG G3/8	2
1603.74	PLUG G3/4	3
1603.92	OIL PLUG G1/2	1
1603.B8	OIL PLUG G3/4 + GASKET	1
1604.87	FRONT HEAD	1
1604.88	MIDDLE HEAD	1
1804.03	HEX BOLT M10X30	8
1804.46	HEX BOLT M12X130	8
1805.23	ALLEN BOLT M8X40	6
1805.51	ALLEN BOLT M6X40	10
1806.09	SCREW M14X35	6
6000.18	ROD ASSEMBLY	3
6063.50	VALVE ASSEMBLYW/O O-RING [B]	6
6063.P8	CRANKCASE ASSEMBLY	1
6061.A2	PLUNGER KIT (KIT 100)	1
6062.49	IN/OUTLET VALVE KIT (KIT 548)	1
6062.50	WATER SEAL KIT (KIT 549)	1
6062.51	BRASS RING KIT (KIT 550)	1

[A] Parts in 6061.A2 (Kit 100).
[B] Parts in 6062.49 (Kit 548).
[C] Parts in 6062.50 (Kit 549).
[D] Parts in 6062.51 (Kit 550).

GAMMA 85/105/125 DIMENSIONS

WEIGHT ..... 83 LBS
LUBRICATION ..... 128 OZ UDOR LUBE
SHAFT OPTIONS
TS1C ... 1-3/8" 6-Spline Male PTO x 35mm Solid Keyed Thru-Shaft
TS2C ..... 1-3/8" 6-Spline Male PTO Thru-Shaft

Dimensional Drawings are Shown in Millimeters. To Convert to Inches, Multiply Dimension x 0.03937

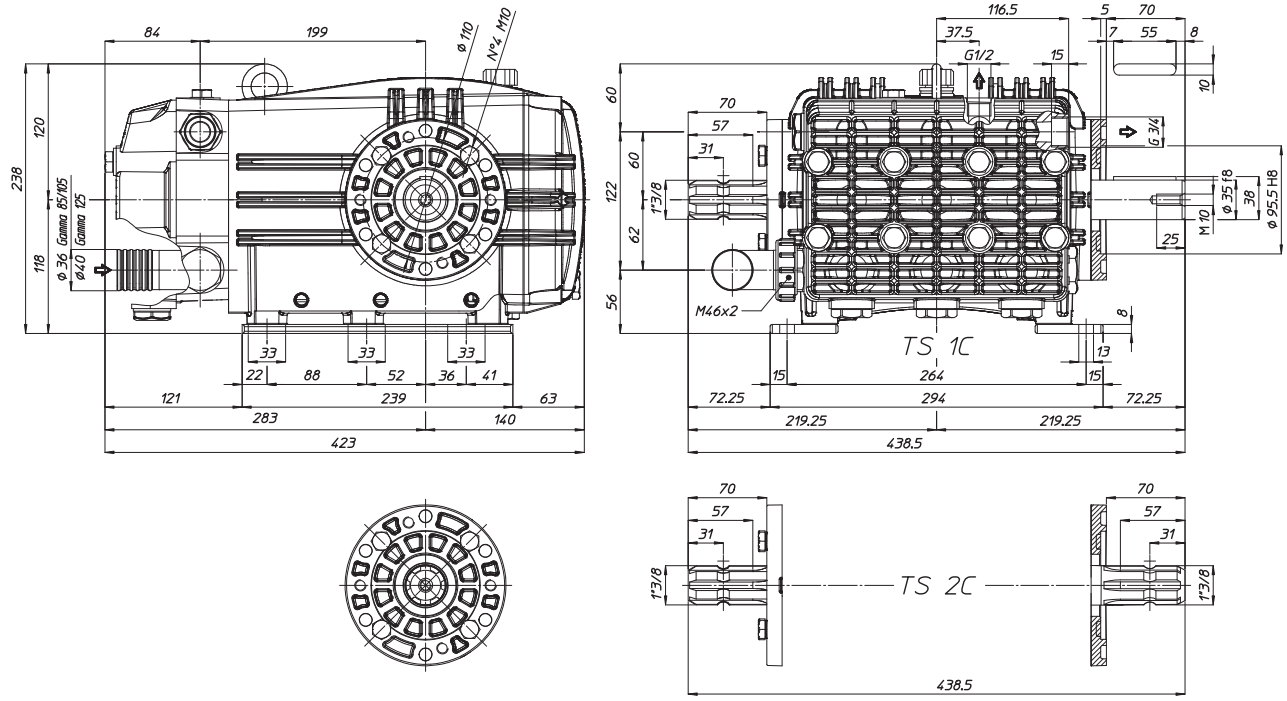

TORQUE SPECS

Ref.	Description	Ft./lb.	Nm	Loctite®
1	Head Bolts	66	90	-
2	Valve Caps	-	-	-
3	Inlet Cap	133	180	-
4	Outlet Cap	103	140	243
5	Bearing Flange Bolts	37	50	-
6	Rear Cover Bolts	8	11	-
7	Connecting Rod Bolts	19	25	243
8	Plunger Bolts	48	65	243
9	Valve Cover Bolts	-	-	-
10	Oil Drain Plug	8	11	-

