GAMMA 62 TS2C

MAX FLOW	17.7 GPM / 67 L/MIN
MAX PRESSURE	725 PSI / 50 BAR
RATED PUMP SPEED	600 RPM
POWER REQUIREMENT	9.0 HP ELECTRIC
LUBRICATION	58 OZ UDOR LUBE

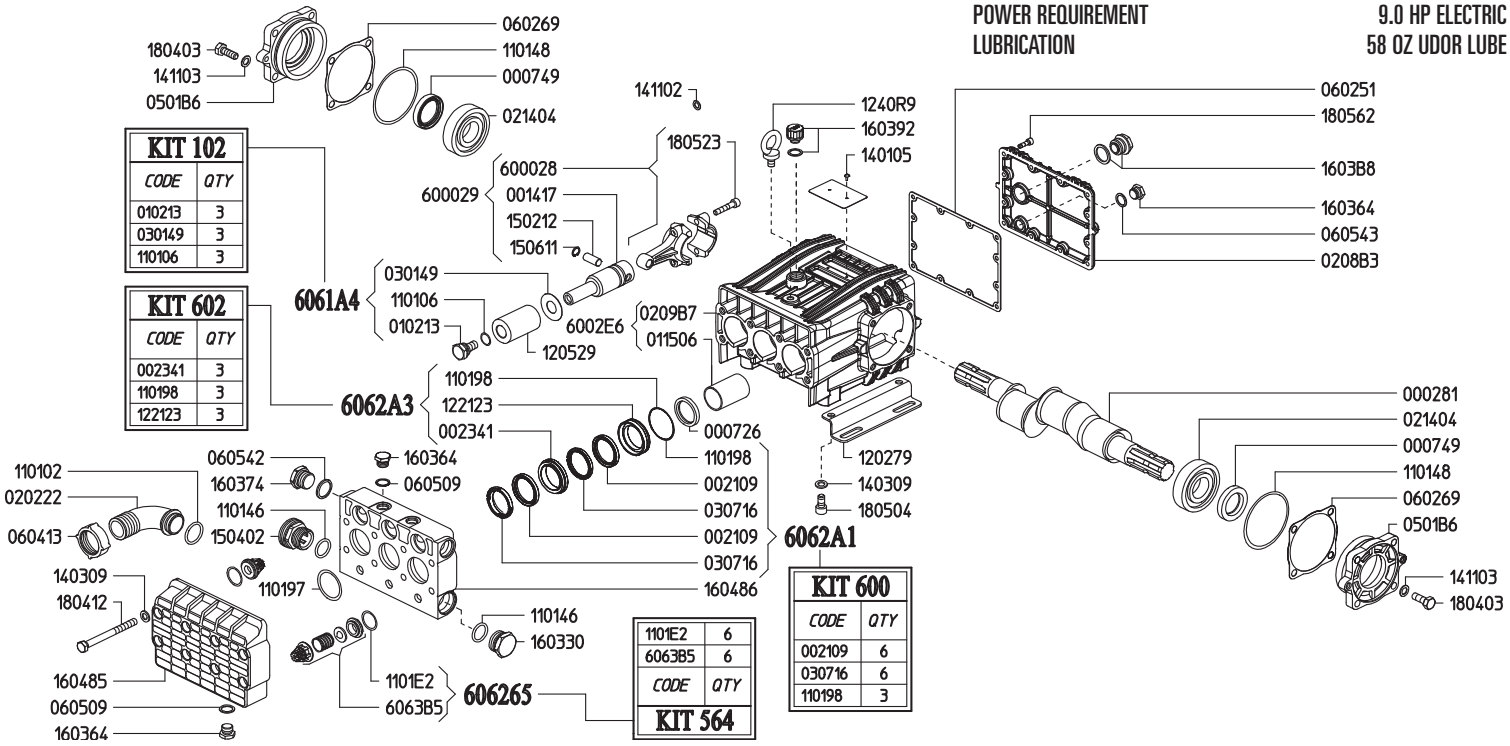

Revised 3-15-2021

Part #	Description	Qty
0002.81	SHAFT TS2C	1
0007.26	OIL SEAL D35	3
0007.49	OIL SEAL D35	2
0014.17	PLUNGER GUIDE	3
0021.09	WATER SEAL H.P. D40 [C]	6
0023.41	UPPER RING D40 [D]	3
0102.13	PISTON BOLT [A]	3
0115.06	BUSHING D35	3
0202.22	HOSE BARB D36	1
0208.B3	BACK COVER	1
0209.B7	CRANKCASE	1
0214.04	BALL BEARING D35	2
0301.49	DISC [A]	3
0307.16	SPACER RING D40 [C]	6
0501.B6	BEARING FLANGE	2
0602.51	BACK COVER GASKET	1
0602.69	FLANGE GASKET	2
0604.13	BRASS NUT M46X2	1
0605.09	GASKET D17	4
0605.42	GASKET D27	1
0605.43	GASKET D17	1
1101.02	O-RING - INLET HOSE BARB	1
1101.06	O-RING - PLUNGER BOLT [A]	3
1101.46	O-RING - INLET PORT	2
1101.48	O-RING - BEARING FLANGE	2
1101.97	O-RING - SPLIT MANIFOLD	3
1101.98	O-RING - PRESSURE RING [C D]	3
1101.E2	O-RING - VALVE [B]	6
1202.79	BASE PLATE	2
1205.29	CERAMIC PLUNGER D40	3
1221.23	PRESSURE RING D40 [D]	3

Part #	Description	Qty
1240.R9	LIFTING HOOK M10	1
1401.05	RIVET 3.5X8	2
1403.09	WASHER D10.5	12
1411.02	SERATED WASHER D8	6
1411.03	SERATED WASHER D10	8
1502.12	PIN D12X27.8	3
1504.02	BRASS INLET CONNECTOR	1
1506.11	SNAP RING D12	3
1603.30	PLUG G1"	1
1603.64	PLUG G3/8	5
1603.74	PLUG G3/4	1
1603.92	OIL PLUG G1/2	1
1603.B8	OIL PLUG G3/4 + GASKET	1
1604.85	FRONT HEAD	1
1604.86	MIDDLE HEAD	3
1804.03	HEX BOLT M10X30	8
1804.12	HEX BOLT M10X110	8
1805.04	ALLEN BOLT M10X20	4
1805.23	ALLEN BOLT M8X40	6
1805.62	ALLEN BOLT M6X20	12
6000.28	ROD ASSEMBLY	3
6002.E6	CRANKCASE ASSY	1
6063.B5	VALVE ASSY W/O O-RING [B]	6
6061.A4	PLUNGER KIT(KIT 102)	
6062.65	IN/OUTLET VALVE KIT (KIT 564)	
6062.A1	WATER SEAL KIT (KIT 600)	
6062.A3	BRASS RING KIT (KIT 602)	

[A] Parts in 6061.A4 (Kit 102).
[B] Parts in 6062.65 (Kit 564).
[C] Parts in 6062.A1 (Kit 600).
[D] Parts in 6062.A3 (Kit 602).

GAMMA 62 DIMENSIONS

WEIGHT ..... 49 LBS
LUBRICATION ..... 58 OZ UDOR LUBE
SHAFT OPTIONS
TS1C ... 1-3/8" 6-Spline Male PTO x 35mm Solid Keyed Thru-Shaft
TS2C ..... 1-3/8" 6-Spline Male PTO Thru-Shaft
TSGR ..... Replacement for GR Models

Dimensional Drawings are Shown in Millimeters. To Convert to Inches, Multiply Dimension x 0.03937

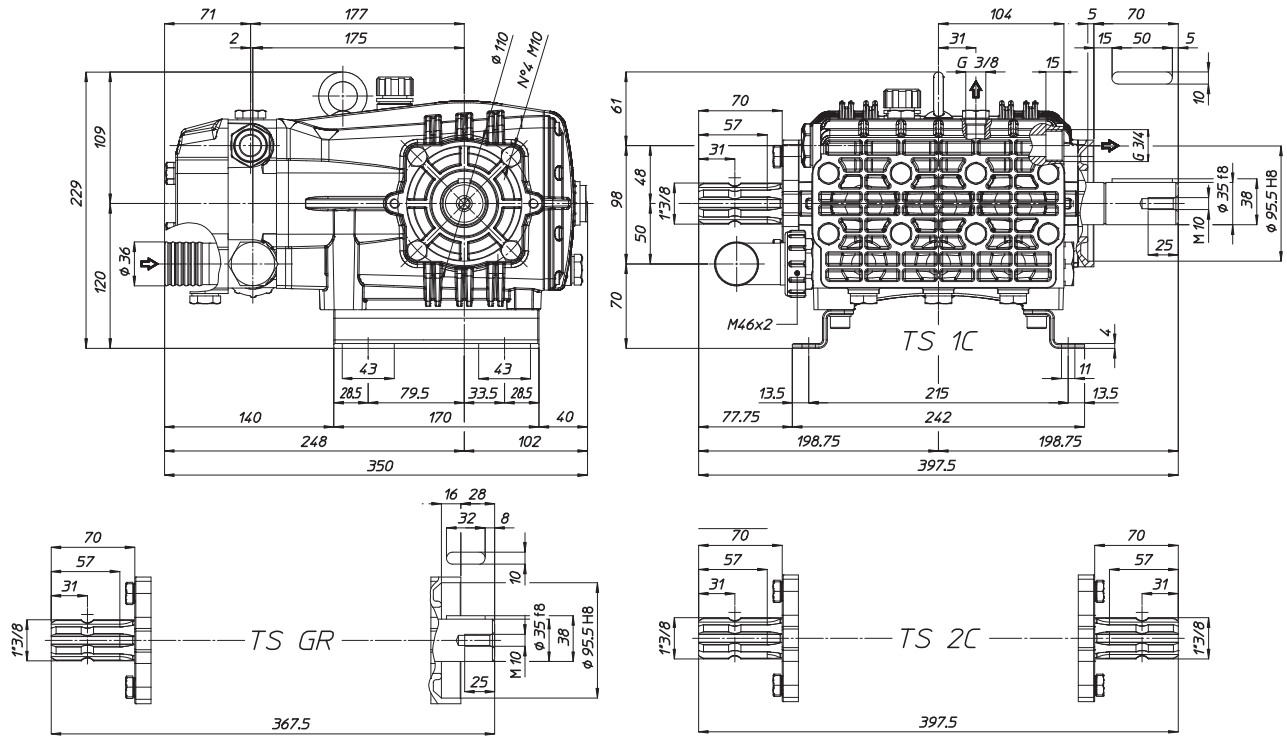

TORQUE SPECS

Ref.	Description	Ft./lb.	Nm	Loctite®
1	Head Bolts	37	50	-
2	Valve Caps	-	-	-
3	Inlet Cap	133	180	-
4	Outlet Cap	103	140	243
5	Bearing Flange Bolts	37	50	-
6	Rear Cover Bolts	8	11	-
7	Connecting Rod Bolts	19	25	243
8	Plunger Bolts	37	50	243
9	Valve Cover Bolts	-	-	-
10	Oil Drain Plug	8	11	-

