GAMMA 160/200 DIMENSIONS

WEIGHT ..... 152 LBS
LUBRICATION ..... 65 OZ UDOR LUBE
SHAFT OPTIONS
TS1C ... 1-3/8" 6-Spline Male PTO x 35mm Solid Keyed Thru-Shaft
TS2C ..... 1-3/8" 6-Spline Male PTO Thru-Shaft

Dimensional Drawings are Shown in Millimeters. To Convert to Inches, Multiply Dimension x 0.03937

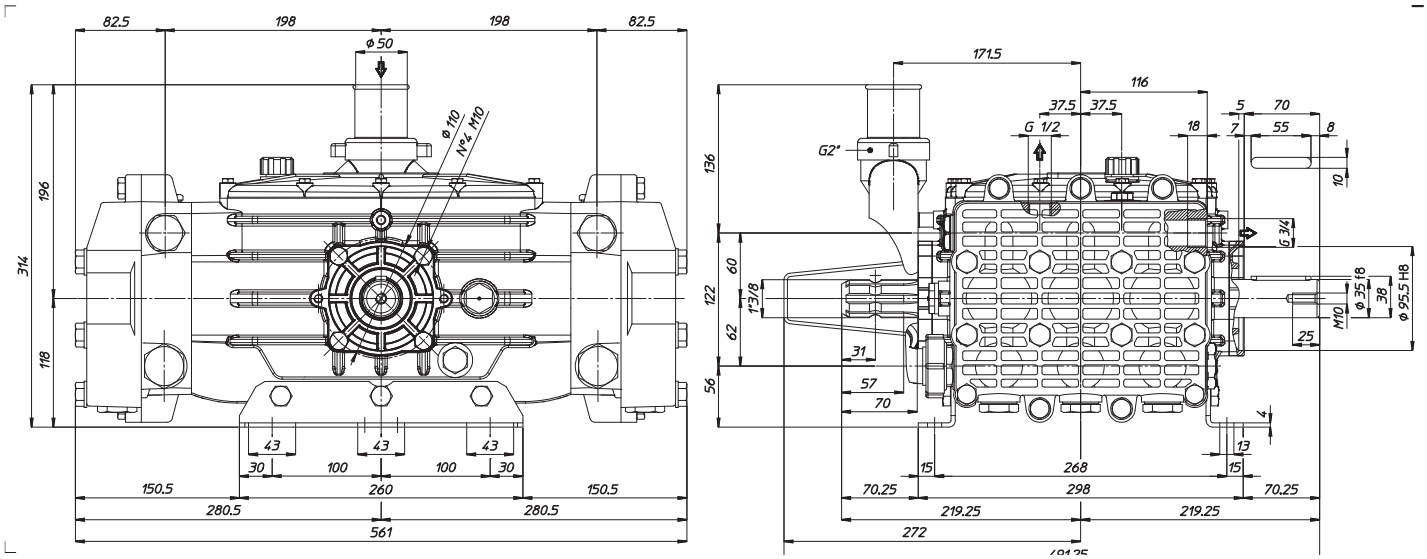

TORQUE SPECS

Ref.	Description	Ft./lb.	Nm	Loctite®
1	Head Bolts	66	90	-
2	Valve Caps	-	-	-
3	Inlet Cap	133	180	-
4	Outlet Cap	103	140	243
5	Bearing Flange Bolts	37	50	-
6	Rear Cover Bolts	8	11	-
7	Connecting Rod Bolts	-	-	-
8	Plunger Bolts	48	65	243
9	Valve Cover Bolts	-	-	-
10	Oil Drain Plug	8	11	-

