DAVEY

Variable Speed Pump

ED60-09

Installation and Operating Instructions

DAVEY EvoDrive



IMPORTANT
Please read carefully

daveywater.com

Please pass these instructions on to the owner of this equipment once the product has been installed.

Contents:

WARNINGS 2

ABOUT YOUR EvoDrive 3

CRITICAL REQUIREMENTS 3

INSTALLATION TYPES 4

INSTALLATION 6

- Choosing a Site 6
- Mounting the Pump 6
- Pipe Connections 6

STARTING THE PUMP 7

MAINTENANCE 7

SPECIFICATIONS 8

CONTROL PANEL OPERATION 9

PROGRAMMING INSTRUCTIONS 10

TROUBLESHOOTING 11

DAVEY WARRANTY 12

WARNINGS

ATTENTION: The EvoDrive system and associated pipework operate under pressure. Under no circumstances should the EvoDrive system, or associated pipework be disassembled unless the internal pressure of the system has been relieved. Failure to observe this warning will expose persons to the possibility of personal injury and may also result in damage to the pump, pipework or other property.

This appliance is not intended for use by persons (including children) with reduced physical, sensory or mental capabilities, or lack of experience and knowledge, unless they have been given supervision or instruction concerning use of the appliance by a person responsible for their safety. Children should be supervised to ensure that they do not play with the appliance. This appliance can be used by children from aged 8 years and above and persons with reduced physical sensory, mental capabilities, or lack of experience and knowledge if they are under supervision, or instruction concerning use of the appliance in a safe way and understand the hazards involved.

IMPORTANT: If the supply cord is damaged, it must be replaced by the manufacturer, its service agent, or similarly qualified persons in order to avoid a hazard. Pump is to be supplied through a residual current device (RCD) having a rated residual operating current not exceeding 30mA. Cleaning and user maintenance shall not be made by children without supervision. Children shall not play with the appliance.

ABOUT YOUR EvoDrive

Thank you for purchasing a Davey EvoDrive VSD (variable speed) pump, this unit has been designed to provide many years of constant pressure performance for domestic water supply applications. It features a plug and play experience for ease of installation. The EvoDrive is primarily designed for pressure boosting and flooded suction type applications, but will also handle suction lifts to 4mts / 13ft

- Most water supply authorities have strict regulations regarding connection to mains water supplies, please adhere to those regulations.
- Note: Maximum system pressure should not exceed 650Kpa / 94psi
- Do not exceed the operational pressures set out in this instruction. Davey Water Products pty ltd will not accept responsibility for loss or damage resulting from failure to adhere to specifications for the installation and operation of the product.
- A pressure reducing valve is required on the suction side of the pump when the incoming pressure exceeds 500kPa / 70psi. In some areas, local codes restrict maximum allowable home pressures, and those cases will also require a pressure reducing valve.

CRITICAL REQUIREMENTS

- The pump is installed in a safe and dry environment
- The pump enclosure has adequate drainage in the event of leakage
- Any transport plugs are removed
- The pipework is correctly sealed and supported
- The pump is primed correctly
- The power supply is correctly connected
- All steps have been taken for safe operation

INSTALLATION TYPES

Housing your Davey pump

To protect your pump from the weather, make sure the pump is housed in the water proof, frost free and well ventilated area. Ensure that it is mounted on a firm base and is secured as per the provided mounting points, as not to place undue stress on pipework and connections.

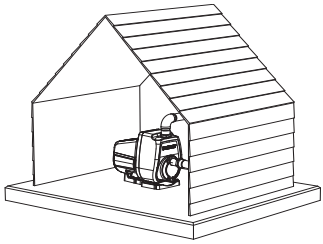

Above ground water sources (flooded suction)

Installations with flooded suction require a isolation valve so water supply can be turned off for pump removal and servicing. There is no need to install a one-way check valve in the suction pipeline as there is a one-way check valve installed in the tee piece immediately on top of the EvoDrive pump discharge as well as the inlet.

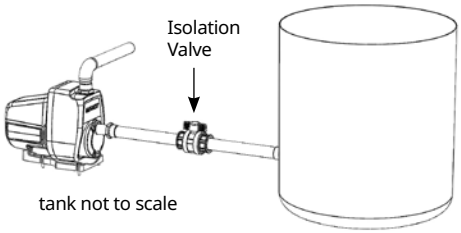

In-ground water sources (eg suction lift from in ground tank)

Whenever the installation position of the pump is higher than the lowest water level, a foot valve should be fitted to the end of the suction pipe.

Ensure that the foot valve is at least 500mm below minimum water level to avoid a vortex of air being drawn into pipe.

As pictured always ensure the installation of your Davey EvoDrive suction pipe is no more than 4mts from the pump inlet to the water level.

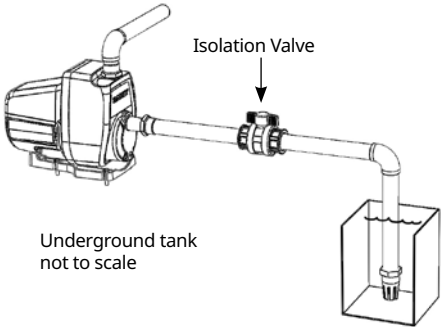

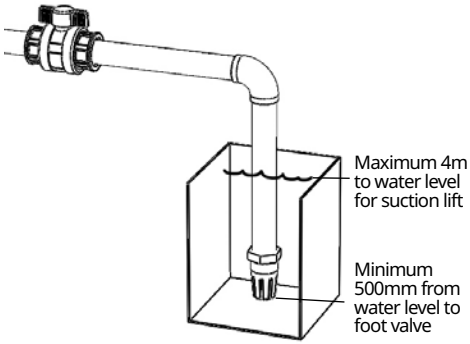

Connection to mains or town water supply systems

Water mains supply authorities have regulations surrounding direct connection to mains water supply, please consult your Davey dealer for specific details for your location. In a lot of cases either an isolation tank (as pictured) or certified backflow prevention valves are used. Directly applied mains pressure can easily exceed the pumps maximum operating pressure so please ensure the system operates with pump specifications. Davey Water Products Pty Ltd cannot accept responsibility for loss or damage resulting from incorrect, or unauthorised installations.

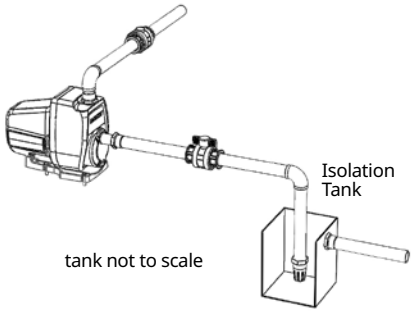

Installation to hot water system

Always protect your system from damage caused by back pressure from hot water systems.

You should always have installed on the hot water inlet an approved non-return valve.

Always ensure the installation meets the appropriate regulations for your local area.

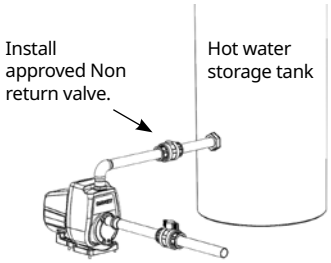

Dual Pump Connection

The EvoDrive can be arranged in a dual pump setup in parallel for alternating redundancy and increased supply capacity on demand. Connect the two pumps using the Davey EvoDrive male to male connection cable (see Davey Dealer).

Once connected press and hold the up arrow on one of the pumps for 3 seconds until the running light flashes on both pumps. they are now connected.

Now press and hold the up arrow key of the pump that is to be the HOST for 3 seconds to confirm that status. They now ready to be used.

Pump operation will alternate between each other for each time water supply is required, and will run simultaneously when that level demand is required.

NOTE: For this pump arrangement greater that DN32 pipework is required to allow for larger flow rates.

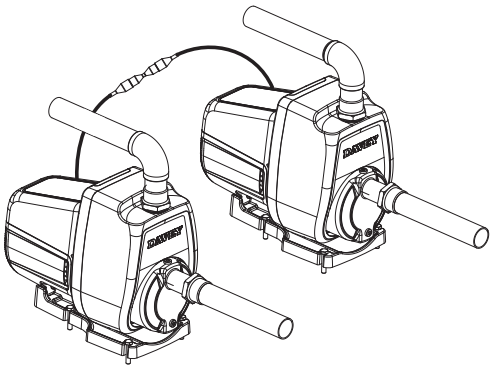

Dual Pump connection lead required (available separately).



INSTALLATION

Choosing a Site

Choose a clean and dry site with a firm base as close to the water source as possible with correct power supply. Make sure your pump is always connected to an adequate, reliable source of clean water. To protect your pump from the weather, make sure the pump house is both waterproof, frost free and has adequate ventilation. The pump should be mounted on a firm base allowing for drainage, to avoid damage to flooring etc. that over time may occur from leaking pipe joints or pump seals. Do not mount the pump vertically. Never place flammable materials on, or near your pump.

It is possible to adjust the pressure set point. Some plumbing authorities impose a pressure limitation on the pressure of water into a dwelling. Consideration of operating pressures should also be given to appliances within the dwelling. If unsure, check with local authorities, or a licenced contractor.

Mounting the Pump

It is best practice to mount the pump using the 4 x bolt locations to fasten it down to the base. It is not recommended to use any form of adhesive to mount it.

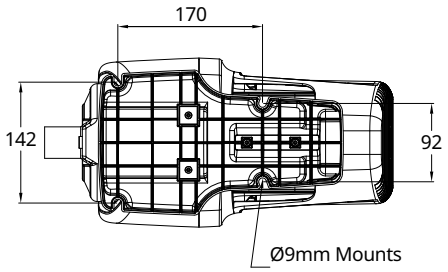

Pipe Connections

For best performance use P.V.C, or polythene pipe with a diameter at least the same as the pump's inlet. Larger diameter pipe may be used to minimise resistance to flow when pumping for distances longer than 5m (16'). Use unions at pipe connections to enable easy removal and servicing.

Use enough "plumbers' tape" to ensure airtight seal and hand tighten only, do not screw connections all the way into suction port. To prevent strain on pump thread always support heavy inlet and outlet pipes.

Lay suction pipe at a constant gradient to avoid air pockets which may reduce pump efficiency, avoid installing 90° elbows before the suction inlet of the pump, within a distance equivalent to 5 x pipe diameter. For example: using 40mm (1½") suction pipe, avoid installing a 90° elbow within 200mm (7¾") of the pump inlet this will assist laminar flow.

STARTING THE PUMP

Your Davey EvoDrive pump is specifically designed to be as easy as possible to install and operate. Once the pump has been installed to the pipework and the casing filled with water to prime, it is as simple as plugging in and powering it up (see image below). Your Davey EvoDrive will come preset at 3 bar (300kPa / 43.5psi) just open the furthest tap from the pump and allow it to run for a few minutes until the system has purged all air out, then observe that the pump stops accordingly.

If the pump continues to run after shut off the tap please check for leaks and repeat above process.

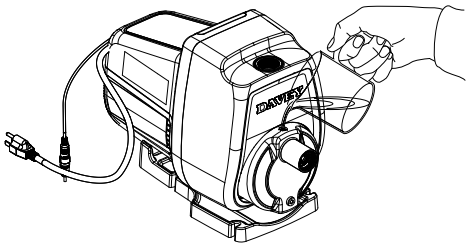

Always ensure your pump casing is full of water prior to initial start up or the pump seal may be damaged.

MAINTENANCE



Check the pressure using an automotive style pressure gauge. Your Davey EvoDrive comes with a pressure tank pre-charged at 210kPa (30psi).

It is best to periodically check the pressure to ensure correct performance.

Pressure can be adjusted via the Schrader (automotive) style valve as pictured below.

If the set pressure of the EvoDrive has been altered the pressure tank must bet set to 70% of that set point to operate within specifications.

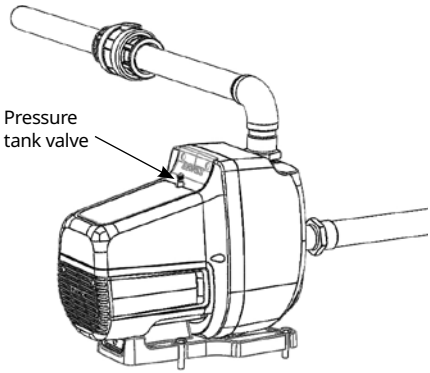

SPECIFICATIONS

Models	Power (P1)		Inlet	Outlet	Plug Type	Regional Suitability	Voltage (V) Frequency (Hz)		Maximum head (m/ft)		Maximum Flow (lpm/gpm)		Maximum suction lift (m/ft)		Maximum Water temperature (Deg°C/F)	
	kW	HP														
ED60-09	0.9	1.2	1"BSP-P	1"BSP-P	Type Y	Australia	220-240V	50-60	70	230	105	28	4	13	75	167
ED-60-09G					Type G	Middle East										

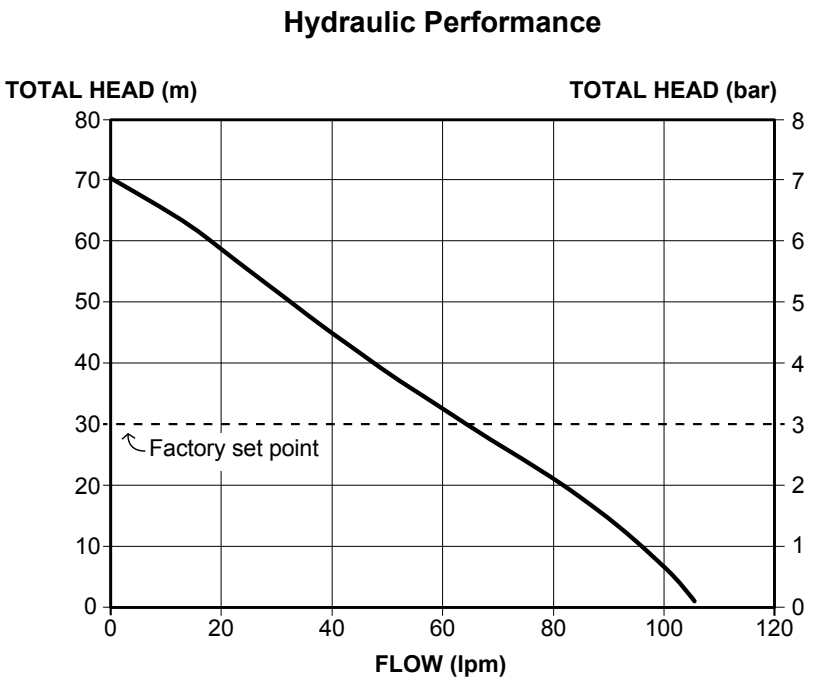

CONTROL PANEL OPERATIONS





PUMP ON

WATER PUMP SWITCH ON/OFF

START UP

PRESS AND HOLD TO RESTORE FACTORY SETTINGS

INCREASE SET PRESSURE

DECREASE SET PRESSURE
press and hold the button for 3s to check water temperature.



WATER PUMP OPERATION

PIPELINE LEAKAGE

POWER FAILURE

INLET WATER SHORTAGE

POWER BAR
THE FEWER LIGHTS,
THE MORE ENERGY SAVINGS

PROGRAMMING INSTRUCTIONS

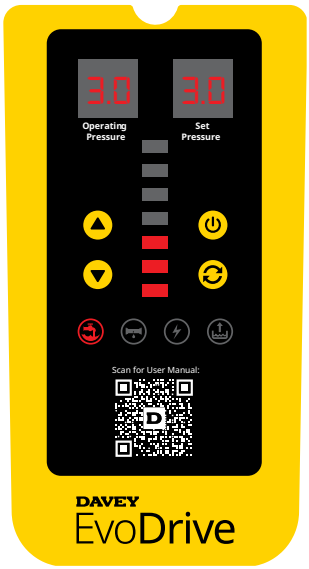

Press key 3s.
All parameters are restored to factory settings

TROUBLESHOOTING

Error Code	Corresponding Fault	Menu Description
E1	Panel and motherboard communication failure.	Refer to Davey Dealer.
E2	Pump stalled or impeller jammed.	Refer to Davey Dealer.
E3	Input voltage failure, icon will illuminate. 	Have qualified electrician check power source.
E4	Outlet pressure sensor failure.	Refer to Davey Dealer.
E5	Controller failure.	Turn off power supply wait for 30 seconds and power up again, if problem still occurs refer to Davey Dealer
E6	Lack of phase.	Refer to Davey Dealer.
E7	Overcurrent.	Refer to Davey Dealer.
E9	Water temperature protection.	Ensure supply water temperature is less specifcation maximum allowed (75°C).
E10	Inlet water shortage Icon will illuminate. 	Check water supply.
E11	Pipe work leakage, Icon will illuminate. 	Check pipework for leaks, check the non return valves for leaks.
E12	Driver board overrheating.	Pump will resume operation once internal temperature lowers, ensure pump is in a cool and ventilated spot.

Davey Warranty

Davey Water Products Pty Ltd (Davey) warrants all products sold will be (under normal use and service) free of defects in material and workmanship for a minimum period of one (1) year from the date of original purchase by the customer as marked on the invoice, for specific warranty periods for all Davey products visit daveywater.com.

This warranty does not cover normal wear and tear or apply to a product that has:

- been subject to misuse, neglect, negligence, damage or accident
- been used, operated or maintained other than in accordance with Davey's instructions
- not been installed in accordance with the Installation Instructions or by suitably qualified personnel
- been modified or altered from original specifications or in any way not approved by Davey
- had repairs attempted or made by other than Davey or its authorised dealers
- been subject to abnormal conditions such as incorrect voltage supply, lightning or high voltage spikes, or damages from electrolytic action, cavitation, sand, corrosive, saline or abrasive liquids,

The Davey warranty does not cover replacement of any product consumables or defects in products and components that have been supplied to Davey by third parties (however Davey will provide reasonable assistance to obtain the benefit of any third-party warranty).

To make a warranty claim:

- If the product is suspected of being defective, stop using it and contact the original place of purchase. Alternatively, phone Davey Customer Service or send a letter to Davey as per the contact details below
- Provide evidence or proof of date of original purchase
- If requested, return the product and/or provide further information with respect to the claim. Returning the product to the place of purchase is at your cost and is your responsibility.
- The warranty claim will be assessed by Davey on the basis of their product knowledge and reasonable judgement and will be accepted if:
  - a relevant defect is found
  - the warranty claim is made during the relevant warranty period; and
  - none of the excluded conditions listed above apply
- The customer will be notified of the warranty decision in writing and if found to be invalid the customer must organise collection of the product at their expense or authorise its disposal.

If the claim is found to be valid Davey will, at its option, repair or replace the product free of charge.

The Davey warranty is in addition to rights provided by local consumer law. You are entitled to a replacement or refund for a major failure and compensation for any other reasonably foreseeable loss or damage. You are also entitled to have the goods repaired or replaced if the goods fail to be of acceptable quality and the failure does not amount to a major failure.

For any internet connected products the consumer is responsible for ensuring a stable internet connection. In the event of a network failure the consumer will need to address the concern with the service provider. Use of an App is not a substitute for the User's own vigilance in ensuring the product is working to expectation.

Use of a Smart Product App is at the User's own risk. To the fullest extent permitted by law Davey disclaims any warranties regarding the accuracy, completeness or reliability of App data. Davey is not responsible for any direct or indirect loss, damage or costs to the User arising from its reliance on internet connectivity. The User indemnifies Davey against any claims or legal actions from them or others relying on internet connectivity or App data may bring in this regard.

Products presented for repair may be replaced by refurbished products of the same type rather than being repaired. Refurbished parts may be used to repair the products. The repair of your products may result in the loss of any user-generated data. Please ensure that you have made a copy of any data saved on your products.

To the fullest extent permitted by law or statute, Davey shall not be liable for any loss of profits or any consequential, indirect or special loss, damage or injury of any kind whatsoever arising directly or indirectly from Davey products. This limitation does not apply to any liability of Davey for failure to comply with a consumer warranty applicable to your Davey product under local laws and does not affect any rights or remedies that may be available to you under local laws.

For a complete list of Davey Dealers visit our website (daveywater.com).

DAVEY

Davey Water Products Pty Ltd
A member of the Waterco Group
ABN 18 066 327 517

daveywater.com

AUSTRALIA

Head Office
6 Lakeview Drive,
Scoresby, Australia 3179
Ph: 1300 232 839
Fax: 1300 369 119
Email: sales@daveywater.com

NEW ZEALAND

7 Industry Road,
Penrose, Auckland 1061
Ph: 0800 654 333
Fax: 0800 654 334
Email: sales@dwp.co.nz

EUROPE

7 rue Eugène Hénaff 69200
Vénissieux, France
Ph: +33 (0) 4 72 13 95 07
Email: info@daveyeurope.eu

NORTH AMERICA

Ph: 1-888-755-8654
Email: info@daveyusa.com

MIDDLE EAST

Ph: +971 50 6368764
Fax: +971 6 5730472
Email: info@daveyuae.com

® Davey is a trademark of Davey Water Products Pty Ltd. © Davey Water Products Pty Ltd 2025.