DAVEY

Multi-fit Universal Pool Pump

EnduraFit - Single Speed: DEF290, DEF430, DEF520
EnduraFit ECO - Variable Speed: DEFE245, DEFE385

Installation and Operating Instructions

DAVEY EnduraFit

DAVEY EnduraFitECO



EnduraFit
- Single speed model shown DEF430

IMPORTANT
Please read carefully

CE

daveywater.com

Please pass these instructions on to the owner of this equipment once the product has been installed.

Contents:

WARNINGS 3

PACKING LIST 4

YOUR DAVEY EnduraFit / EnduraFit ECO PUMP 5

INSTALLATION 5

- **Location** 5
- **Weather Protection** 5
- **Power Connection** 5
- **Pipe Connections** 5
- **Typical Installation Diagram** 5

STARTING THE PUMP 6

- **Before you start ensure that:** 6
- **Priming the Pump** 6

PUMP OPERATION 7

- **Single Speed Models** 7
- **Variable Speed Models** 7
- **Guidelines for Recommended Pump Operating Hours:** 8
- **Operating pump with a Davey Salt Water Chlorinator** 8
- **Operating pump with a Suction Pool Cleaner** 8
- **Control Programming** 8
- **Speed (rpm) Adjustment** 9
- **Priming Enabled / Disabled** 9
- **Priming Time and Speed (rpm) Setting** 9
- **Speed (priming) adjustment** 9
- **Resetting to Factory Conditions** 9

WATER QUALITY 10

TROUBLESHOOTING 11

SOFTWARE ERROR CODES 12

SPECIFICATIONS 13

- **Hydraulic Performance DEF290, DEF430, DEF520** 13
- **Hydraulic Performance DEFE245, DEFE385** 13

DIMENSIONS 14

DAVEY WARRANTY 15

WARNINGS



WARNING: Failure to follow these instructions and comply with all applicable codes may cause serious bodily injury and/or property damage.



The installation of this product should be carried out by a person knowledgeable in swimming pool plumbing requirements following the installation instructions provided in this manual.



POWER CONNECTIONS AND WIRING MUST BE CARRIED OUT BY AN AUTHORISED ELECTRICIAN.



IMPORTANT INFORMATION: If equipotential bonding structure is required, then an Equipotential Bonding Point is provided. (Please refer to your local wiring standard and regulations).



ATTENTION: Davey Water Products recommends that all installations are fitted with earth leakage or residual current protection devices. Power supply to this pump needs to be through an isolating transformer or RCD, having a rated operating current not exceeding 30mA. In the interests of safety, we advise that the installation must be in accordance with AS3000 wiring rules, or local equivalent. Ensure that an electrical isolation switch be located within easy access so that the pump can be turned off in an emergency.



ATTENTION: In accordance with AS/NZS 60335.2.41 we are obliged to inform you that this pump is not to be used by children or infirm persons and must not be used as a toy by children. If the pump and filter are located below pool water level, it is necessary to fit isolating valves in the pipe between the pump and the skimmer box and in the return pipe between the pump and the filter.

IMPORTANT: The fittings on this product are constructed of ABS. Some PVC jointing compounds are incompatible with ABS. Check compound suitability before use.



WARNING! Pump suction is hazardous and can trap and drown or disembowel bathers. Do not block suction. Do not use or operate swimming pools if a suction cover is broken, missing or loose. Two suction covers and inlets must be provided into every pump to avoid suction entrapment.



Caution! Do not add chemicals directly to the pool skimmer. Adding undiluted chemicals may damage pump and filter and void warranty.



WARNING! Ensure to wait for 30 seconds when stopping and restarting pump to allow capacitors to properly dissipate energy.

PACKING LIST



1 x



1 x



2 x



2 x



2 x 50mm
2 x 40mm



YOUR DAVEY EnduraFit / EnduraFit ECO PUMP

Congratulations on your purchase of a quality product from the Davey range of Pool equipment. You are assured of many years of reliable and efficient performance from your Davey EnduraFit/ECO pool pump backed by Davey's warranty.

The Davey EnduraFit/ECO pool pump has been designed to circulate swimming pool water in conditions set out in the Australian Standard for swimming pool water quality (AS 3633) or equivalent. They should not be used for any other purpose without first consulting your Davey Dealer or the Davey Customer Service Centre.

Every Davey EnduraFit/ECO pool pump is thoroughly tested against a number of pressures, voltage, current and mechanical performance parameters. Davey's advanced pump manufacturing technology provides reliable and efficient pumping performance that lasts and lasts.

INSTALLATION

Location

The pump should be located as close to the water as practicable and mounted on a firm base in a well-drained position, high enough to prevent any flooding. It is the installer's responsibility to locate the pump such that the nameplate can be easily read, and it can be readily accessed for service. The holes in the base shall be fixed on the ground (alternatively, this can be with a rubber pad and/or mounting frame) after installing the pump.

Weather Protection

It is recommended that your Davey EnduraFit/ ECO pump be installed in a dry, sheltered location out of direct sunlight. Ensure the pump has adequate ventilation, especially at the rear of the pump where the fan is located.

Power Connection

Your Davey EnduraFit/ECO pump comes ready to plug and run. It is not recommended to use any form of extension lead, and ensure the connection is in a dry location and off the ground.

Pipe Connections

The Davey EnduraFit/ECO comes with barrel unions and tail connections to fit both 40mm and 50mm pipework, please do not use any reduction of this as it may affect the performance of the pump. Only tighten barrel unions by hand and apply silicon lubrication to O-rings to ensure a positive seal.

50mm/40mm Tail components supplied	
	2x Universal locking collars
	2x 50mm Tails
	2x 40mm Tails
	2x Sealing O-Rings

Typical installation diagram

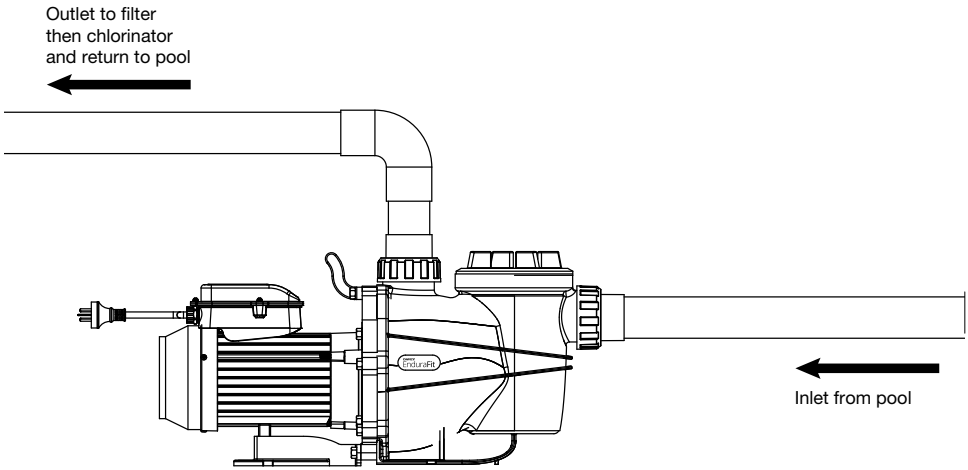

STARTING THE PUMP

Before you start ensure that:

- The pump is installed in a safe environment
- The pump enclosure has adequate drainage in the event of leakage
- The pipework is correctly sealed and supported
- The pump is primed correctly
- The power supply is correctly connected
- All steps have been taken for safe operation
- All valves are open for water to flow

Priming the Pump

The seal in your pump requires water to lubricate its initial startup, it can be easily damaged if the pump is operated without ensuring the pump has been primed.

1. Remove the leaf basket lid and fill the pump with water.
2. Replace the lid.
3. Power up pump and observe the water flow in the basket becomes clear and mostly free of air bubbles.
4. If the pump fails to achieve a good flow, check inlet (suction) pipe for leaks, as very small leaks have a dramatic effect on the pump's performance.
5. Run the system for a few minutes to allow all trapped air to be expelled.



Never run pump dry. Running the pump with no water may damage the mechanical seals, causing leakage and flooding. Dry running damage and associated damage is not covered under warranty.

PUMP OPERATION

Single Speed Models

Davey EnduraFit single speed pump models: DEF290, DEF430, DEF520

Your Davey EnduraFit single speed pump models are designed as a simple plug and play units, it is recommended that when combined with a Davey chlorinator system* the pump is simply plugged into the controller, and it will operate it according to the settings established. Alternatively, it can be powered via pool timer system.

Note: Davey EnduraFit is compatible with most chlorination controllers and timing devices.

Variable Speed Models

Davey EnduraFitECO variable speed pump models: DEFE245, DEFE385

To operate efficiently and prevent pump damage there must be a free flow of water to and from the pump. Before starting ensure that:

- All pipework is correctly sealed.
- The pool/spa water level is at the correct height (at least halfway up the skimmer base).
- All appropriate valves are open and there is nothing preventing the flow of water through the system.

NOTE: During high speed start up, the LED for the last set speed will flash.

1. First prime the pump by removing the strainer basket lid and filling the strainer basket area with water. Replace the lid, ensuring that it seals on the large o-ring.
2. Connect to the power supply and switch on. Pump will automatically start in priming mode and run for 3 minutes, it will continue to run on high unless other flows are selected.
3. Allow the pump to run, so that any air trapped may be expelled. It will start in High Flow mode (high speed) for 3 minutes in order to prime effectively.
4. If prime is not established within approximately three minutes, as evidenced by a strong flow of water and no bubbles returning to the pool, switch off the pump and repeat the procedure. Continued evidence of air under the strainer basket lid indicates an air leak in the suction piping which should be rectified to avoid pump damage.

For optimum pump performance, the strainer basket housing should always be full of water and free from air bubbles. The water level of the pool should always be maintained to at least halfway up the skimmer box ensuring water is in the pump at all times. From time to time it may be necessary to re-prime the pump. This should be carried out as described above.

Never run pump dry. Running the pump with no water may damage the mechanical seals, causing leakage and flooding. Dry running damage and associated damage is not covered under warranty.

Low Energy Operation:

Your EnduraFit/ECO pump has 3 speed settings which are also programmable:

Speed Settings		
1.	Eco Flow – Lowest Speed	1900rpm
2.	Mid Flow – Medium Speed	2400rpm
3.	High Flow – Highest Speed	2850rpm

EnduraFitECO Touch Pad



Display turns off after 3minutes of inactivity

- Eco Flow mode provides the lowest speed and therefore the greatest energy savings.
- For programming speed and time options refer to programming section of this manual.

Operation	Recommended Speed Settings
Pool Filtration	ECO Flow
Automatic pool cleaner operation	Mid Flow
Backwashing your media filter	High Flow
Manually cleaning your pool	
Water Feature operation	
Spa Jet operation	
Solar pool heating	

Guidelines for Recommended Pump Operating Hours:

Australian Standards AS3633: "Private swimming pools - water quality" states that "The minimum turnover rate shall be a single turnover of the full volume of the pool water, within the period that the pump would normally be operating...."

Consult your Davey dealer to understand the specific requirements of your pool and how long to filter per day.

Operating pump with a Davey Salt Water Chlorinator

Davey ChloroMatic and EcoSalt salt water chlorinators require a minimum flow rate of 80 litres per minute (lpm) through the chlorinator cell for best efficiency and cell life. Please refer to the performance graph as a reference for the flow in your pool and refer to the pressure indicated by the gauge on the filter.

Ensure flow rate is sufficient to cover cell plates completely at all times of operation.

Operating your Automatic Pool Cleaner:

Before installing or purchasing a pool cleaner for use with your EnduraFit/ECO Pump, it is important to know the minimum flow rates required for it to operate effectively.

Operating pump with a Suction Pool Cleaner

1. Activate the High Flow setting and allow the pump to fully prime by running for around 3 minutes. You will know the pump is primed when you can see a strong flow of water through the clear leaf basket lid.
2. When all air is expelled from the leaf basket, connect the pool cleaner hose firmly into the skimmer plate or dedicated wall suction.
3. Select the speed setting that enables best performance from your automatic pool cleaner. Mid setting should be ample for most cleaners but if the cleaner requires better performance, activate the High Flow setting.
4. The cleaner should only be connected for as long as is required to clean the surface of your pool. When cleaning is complete, disconnect the cleaner and remove the skimmer plate from the skimmer box.

NOTE: To get optimum energy efficiency from your EnduraFit/ECO pump DO NOT keep the automatic pool cleaner connected when cleaning is not required.

5. Reactivate the most efficient speed setting for daily filtration. The ECO Flow setting is recommended.

Control Programming

It is a function of your new Davey EnduraFit/ ECO pool pump that the pre-set programming can be adjusted to suit specific conditions. Davey recommend that you consult your dealer to correctly understand the conditions if you wish to alter the factory settings, to avoid undesired results.

Note: Programming adjustment cannot be performed while pump is in the 3 min priming run time or in any run condition please stop before proceeding.

Factory Priming Settings	
Factory RPM	2850
RPM range*	1000 - 2850
Factory Priming Time	3 minutes
Priming time range*	1 - 240 mins

*Adhere to all recommendations for priming time and RPMs



NOTE: to program the controller it requires constant power connection, when plugged into a chlorination device it may trigger the low flow option and subsequently cut the power to the pump.



WARNING!
When stopping and restarting the pump please ensure to wait for 30 seconds to allow the capacitor to dissipate any residual charge.

Speed (rpm) adjustment:

1. Depress the **FLOW** button for the speed that is to be adjusted for 5 seconds, the display should blink and the rpm should be displayed to signify the control is ready to adjust.
2. Pressing the **ECO FLOW** button will lower the speed (rpm) by 25 Rpm at a time.
3. Pressing the **HIGH FLOW** button will increase the speed (rpm) by 25 Rpm at a time.
4. Pressing the **MID FLOW** button saves the data and returns to multispeed mode.

NOTE: High flow setting will not exceed 2850 rpm. Davey do not recommend lowering the priming speed as it may adversely affect pump performance.

Priming Enabled/Disabled:

1. Depress the **STOP** button for 5 seconds to DISABLE/ENABLE primetime. The power **LED** (green) will illuminate solidly when time is DISABLED. Repeat to ENABLE priming once again, the **LED** (green) but will Illuminate flashing this time.
2. Resetting the control will restore the factory 3-minute priming feature.

Davey do not recommend disabling the priming feature as your system will not perform as expected.

Priming time and speed (rpm) setting:

The following programming steps are in a sequential flow.

Time (priming) adjustment:

1. Depress the **STOP** button for 10 seconds to enter time adjustment mode, **P3** will display on screen and green **LED** will blink twice every second.
2. Depressing the **ECO FLOW** button will lower the time period for priming by 1min increments (Holding for 2 seconds to decrease time continuously).
3. Depressing the **HIGH FLOW** button will increase the time period for priming by 1min increments (Holding for 2 seconds to increase time continuously).
4. Depressing the **MID FLOW** button will save the adjusted time period and automatically proceed into Speed (priming) adjustment.

Note: Davey do not recommend the adjustment of the priming time as it may adversely affect pump performance.

Speed (priming) adjustment:

1. Depress the **ECO FLOW** button to decrease the speed by 25 rpm per button press.
2. Depress the **MID FLOW** button to save the adjusted speed.

   Note: High Flow setting will not exceed 2850 rpm.

Resetting to Factory Condition:

1. Depress and hold all three **FLOW** buttons for 5 seconds and all speeds and priming setting will return to factory conditions, all **LEDs** will light up momentarilyand then motor will stop.
2. Normal operation can then be utilised again.

WATER QUALITY

Maintaining balanced water chemistry is important to the life of your pool pump. This pump is designed to be used with Pool water, balanced in accordance with Langelier Saturation Index.

POOL WATER BALANCE	Free Chlorine (ppm)	pH	Total Alkalinity TA (ppm)	Calcium Hardness (ppm)	Stabiliser - Cyanuric Acid (ppm)
Ideal reading / range	1.5 - 3	Concrete & tiled pools 7.4-7.6 Other surfaces 7.2-7.4	80 - 150	Concrete & tiled pools 200-275 Other surfaces 100-225	25-50ppm (15-25ppm if used with an ORP controller) Not to be used in indoor pools.
To increase	Increase output of sanitiser. Add chlorine. Increase filtration time.	Add Soda Ash (Sodium Carbonate)	Add Buffer (Sodium Bicarbonate)	Add Calcium Chloride	Add Cyanuric Acid
To decrease	Decrease output of sanitiser. Decrease filtration time.	Add Hydrochloric Acid	Add Hydrochloric Acid or Dry Acid	Partially drain & refill pool with lower hardness water to dilute	Partially drain & refill pool to dilute
Frequency of testing	Weekly	Weekly	Weekly	Weekly	Regularly

Please consult your local pool shop regularly to have your water tested.

TROUBLESHOOTING

Symptoms	Possible Issue	Corrective Action
1. Pump will not prime	* Suction leak * No water in pump * Closed valves or blockages	Make sure water level is correct through suction points. Ensure baskets and strainers are free of debris. Tighten all fittings / unions on the suction side of the pump, remove and replace mechanical seal. Make sure hair and lint pot is full. Open all valves in system, clean skimmer and pump basket, check pump impeller of blockage.
2. Motor will not run	* No power to motor * Pump jammed	Check that all electrical switches are on. Ensure the circuit breakers are properly set. Check if timer is set properly. Check motor wiring at terminals. With power switched off turn pump shaft (should spin freely). If not contact electrician or nearest Davey dealer for service.
3. Motor will not run	* Dirty filter * Dirty skimmer and or Pump strainer * Suction leak * Closed valves or blockages	Backwash or clean cartridge. Clean skimmer and pump strainer.
4. Motor runs hot	* Low or incorrect voltage * Installed in direct sunlight * Poor ventilation	Supply to be corrected by electrician. Motors run hot to touch and this is normal. Thermal overload protector will function to turn them off if there is an overload or high temperature problem. The pump motor cooling fan must have a minimum clearance of 150mm at the rear or pump. Shield from the weather. Do not tightly cover or enclose motor.
5. Noisy pump operation	* Failed bearing * Suction (inlet) leak * Suction (inlet) blockage * Jammed impeller * Low pool level as to not provide adequate supply to the pump	Have electrician replace. Locate and clear blockage. Dismantle pump and remove foreign matter and debris from around impeller. Improve suction, reduce suction lift, reduce number of fittings, increase pipe size, increase discharge pressure and reduce flow by throttling discharge valve.
6. Motor overload cuts out	* Motor not connected properly * Low incoming voltage * Jammed impeller	Have electrician check wiring and voltage. Ensure pump is not running on an extension cord. Report low supply to authorities. Contact Davey Dealer for service.

The interface control panel has a digital display and red error display LED to indicate operation issues. Normal operation is indicated by a single flash of this LED upon start-up. Any subsequent blink sequence of this LED indicates that a fault has been registered by the motor control, with the explanation of these faults given in the below table. This table also includes the cause for this fault as well as some potential actions to potentially resolve the issue.

SOFTWARE ERROR CODES

Blinks/ Display	Fault	Software Cause	Action
1/ **Er01**	Micro controller failure	Micro controller is continually rebooting.	No action can be taken to resolve issue. Return motor for warranty.
2/ **Er02**	Under voltage	The line voltage has dropped below 180 volts AC running.	- Pump will resume operation on return of correct incoming voltage. Check electrical supply if problem persists, contact Davey dealer - Reduce distance between motor/pump and breaker. - Turn off any other non-critical equipment on the same breaker circuit.
3/ **Er03**	Temperature	Internal electronics detected an over temperature condition (+100C on sensor)	- Ensure the motor has sufficient air flow to cool the motor. - Check pump leaf basket for obstructions - Turn the power off at the timer / breaker and allow motor to remain off for at least 15 minutes before reapplying power.
4/ **Er04**	Over current trip	Over current protection has tripped.	- Inspect all equipment / piping in the system connected to pump for obstructions - Inspect the motor fan is clear from obstructions
5/ **Er05**	Over voltage	The line voltage has risen above 269 volts AC.	- Turn off power to pump for at least 30 seconds, and restart. If problem persists contact your Davey dealer.
6/ **Er06**	Output shaft seized	Motor failed to start.	- Check for obstructions around fan cover area - Inspect all equipment in-line with the pump for any obstructions or blockages.
7/ **Er07**	Self-check	One or more of the self-tests failed either at start up or while running.	- Turn the power off at the timer / breaker and allow motor to remain off for at least 15 minutes before reapplying power. - Return motor for warranty if error persists.
8/ **Er08**	Motor fault	One or more of the phases has become disconnected.	- Contact Davey dealer for repair or replacement

SPECIFICATIONS

Models	Model Type	Qmax		Hmax (m)	Power (P1)		Power (P2)		Amps (A)	Weight (kg)
		lpm	m^3/hr		kW	HP	kW	HP		
DEF290	EnduraFit (single speed)	380	22.8	17	1.06	1.4	0.76	1.0	4.7	17
DEF430		497	29.8	20.5	1.61	2.2	1.13	1.5	6.9	20
DEF520		574	34.4	22.7	2.05	2.7	1.50	2.0	9	23
DEFE245	EnduraFitECO (variable speed)	335	20.1	15.4	0.91	1.2	0.73	1.0	6.1	14.0
DEFE385		462	27.7	18.2	1.42	1.9	1.15	1.5	9	15.5

Hydraulic performance DEF290, DEF430, DEF520

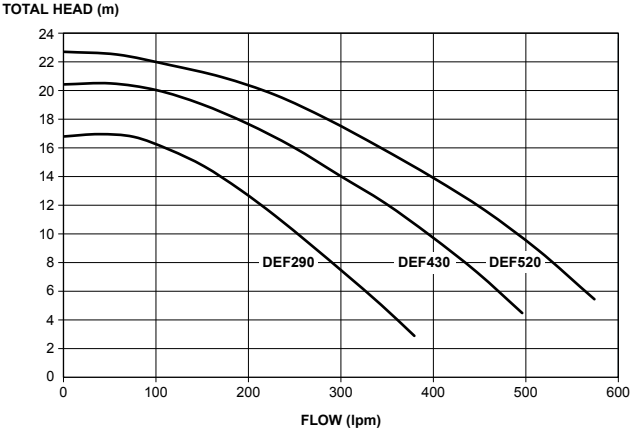

Hydraulic performance DEFE245, DEFE385

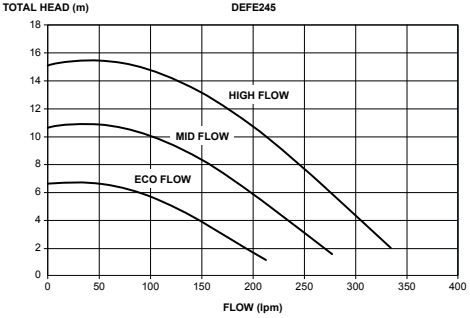

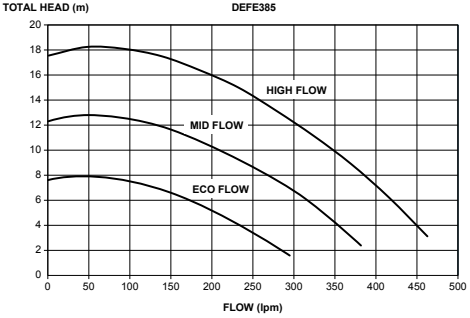

DIMENSIONS

Models	Model Type	DIM A	Inlet / Outlet	Mounting Holes
DEF290	EnduraFit (single speed)	626	Barrel unions and 40/50mm tails	ØM10 132 front / 120 rear
DEF430		645		
DEF520		685		
DEFE245	EnduraFitECO (variable speed)	657		
DEFE385				

DEF290, DEF430, DEF520

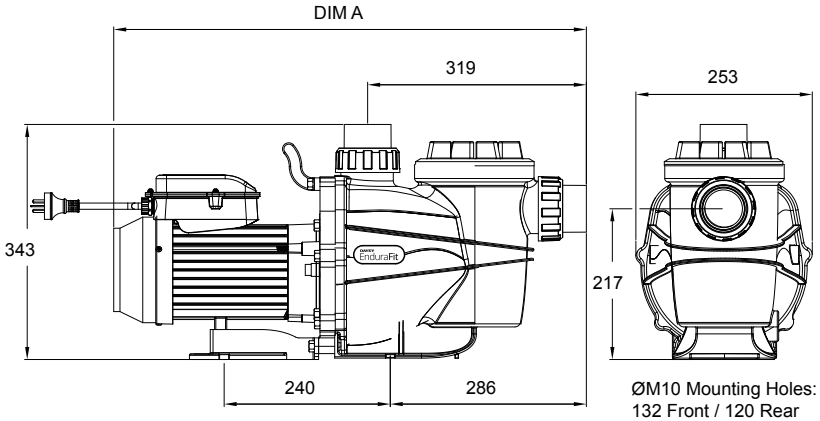

ØM10 Mounting Holes:
132 Front / 120 Rear

DEFE245, DEFE385

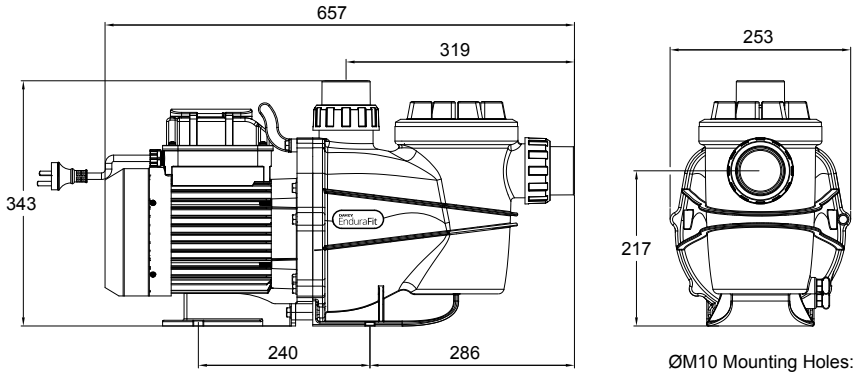

ØM10 Mounting Holes:
132 Front / 120 Rear

Davey Warranty

Davey Water Products Pty Ltd (Davey) warrants all products sold will be (under normal use and service) free of defects in material and workmanship for a minimum period of one (1) year from the date of original purchase by the customer as marked on the invoice, for specific warranty periods for all Davey products visit daveywater.com.

EnduraFit & EnduraFit ECO pool pump warranty details	
3 years	Wet end casing
2 years	Motor, Mechanical seal, leaf basket & lid, O-ring, impeller& diffuser
1 year	Commercial Applications*
1 year	Labour & workmanship

*commercial applications, include but are not bound to motels, hotels, caravan parks and venues that cater for public bathing.

This warranty does not cover normal wear and tear or apply to a product that has:

- been subject to misuse, neglect, negligence, damage or accident
- been used, operated or maintained other than in accordance with Davey's instructions
- not been installed in accordance with the Installation Instructions or by suitably qualified personnel
- been modified or altered from original specifications or in any way not approved by Davey
- had repairs attempted or made by other than Davey or its authorised dealers
- been subject to abnormal conditions such as incorrect voltage supply, lightning or high voltage spikes, or damages from electrolytic action, cavitation, sand, corrosive, saline or abrasive liquids,

The Davey warranty does not cover replacement of any product consumables or defects in products and components that have been supplied to Davey by third parties (however Davey will provide reasonable assistance to obtain the benefit of any third-party warranty).

To make a warranty claim:

- If the product is suspected of being defective, stop using it and contact the original place of purchase. Alternatively, phone Davey Customer Service or send a letter to Davey as per the contact details below
- Provide evidence or proof of date of original purchase
- If requested, return the product and/or provide further information with respect to the claim. Returning the product to the place of purchase is at your cost and is your responsibility.
- The warranty claim will be assessed by Davey on the basis of their product knowledge and reasonable judgement and will be accepted if:
  - a relevant defect is found
  - the warranty claim is made during the relevant warranty period; and
  - none of the excluded conditions listed above apply
- The customer will be notified of the warranty decision in writing and if found to be invalid the customer must organise collection of the product at their expense or authorise its disposal.

If the claim is found to be valid Davey will, at its option, repair or replace the product free of charge.

The Davey warranty is in addition to rights provided by local consumer law. You are entitled to a replacement or refund for a major failure and compensation for any other reasonably foreseeable loss or damage. You are also entitled to have the goods repaired or replaced if the goods fail to be of acceptable quality and the failure does not amount to a major failure.

For any internet connected products the consumer is responsible for ensuring a stable internet connection. In the event of a network failure the consumer will need to address the concern with the service provider. Use of an App is not a substitute for the User's own vigilance in ensuring the product is working to expectation.

Use of a Smart Product App is at the User's own risk. To the fullest extent permitted by law Davey disclaims any warranties regarding the accuracy, completeness or reliability of App data. Davey is not responsible for any direct or indirect loss, damage or costs to the User arising from its reliance on internet connectivity. The User indemnifies Davey against any claims or legal actions from them or others relying on internet connectivity or App data may bring in this regard.

Products presented for repair may be replaced by refurbished products of the same type rather than being repaired. Refurbished parts may be used to repair the products. The repair of your products may result in the loss of any user-generated data. Please ensure that you have made a copy of any data saved on your products.

To the fullest extent permitted by law or statute, Davey shall not be liable for any loss of profits or any consequential, indirect or special loss, damage or injury of any kind whatsoever arising directly or indirectly from Davey products. This limitation does not apply to any liability of Davey for failure to comply with a consumer guarantee applicable to your Davey product under local laws and does not affect any rights or remedies that may be available to you under local laws.

For a complete list of Davey Dealers visit our website (daveywater.com).

DAVEY

Davey Water Products Pty Ltd
A member of the Waterco Group
ABN 18 066 327 517

daveywater.com

AUSTRALIA

Head Office
6 Lakeview Drive,
Scoresby, Australia 3179
Ph: 1300 232 839
Fax: 1300 369 119
Email: sales@daveywater.com

NEW ZEALAND

7 Rockridge Avenue,
Penrose, Auckland 1061
Ph: 0800 654 333
Fax: 0800 654 334
Email: sales@dwp.co.nz

EUROPE

7 rue Eugène Hénaff 69200
Vénissieux, France
Ph: +33 (0) 4 72 13 95 07
Email: info@daveyeurope.eu

NORTH AMERICA

Ph: 1-888-755-8654
Email: info@daveyusa.com

MIDDLE EAST

Ph: +971 50 6368764
Fax: +971 6 5730472
Email: info@daveyuae.com

® Davey is a trademark of Davey Water Products Pty Ltd. © Davey Water Products Pty Ltd 2025.