

DEF430

DAVEY
EnduraFit

Model Numbers:
DEF290, DEF430, DEF520

WARRANTY
3 YEARS*

APPLICATIONS

Ideal for filtration, spa jets, heating and in-floor cleaning systems. Models to suit plunge pools, swim spas and pools up to 125,000 litres

DURABLE MULTI-FIT UNIVERSAL POOL PUMP

Built to Endure, Engineered to Perform.

EnduraFit Pumps are designed to deliver dependable performance with smart engineering and premium features to make pool care easy. From improved water flow to quieter operation, every feature is designed to maximise your pool enjoyment while minimising maintenance time.

FEATURES & BENEFITS

- **High performance:** designed with a custom-shaped impeller and diffuser that work together to move water efficiently and reduce pressure loss. Greater water flow, less head loss, and energy-smart operation.
- **Engineered for durability:** made from high-grade engineering plastics for superior operational life. Features a strong single-piece strainer pot and volute for maximum strength. A 316 stainless steel mechanical seal offers excellent resistance to corrosion.
- **Universal fit:** developed to specifications that retrofit a wide variety of existing installations**.**
- **Safe and Stable:** engineered with Thermal Overload and Smart Motor Protection, designed to prevent water ingress from the wet-end, ensuring complete motor protection.
- **Quieter, Smoother Operation:** the heavy-duty pump body and design reduces water turbulence and operating noise, while the robust support base and added insulation help absorb vibration.
- **Save time and money:** move more water, using less energy. The energy efficient design lowers electricity bills without sacrificing performance.
- **Better water quality:** smooth, consistent flow improves chemical distribution and debris removal.

*See Installation & Operating Instructions at Davey.com.au for full details.

Single Speed Pumps

DAVEY

DAVEY
EnduraFit

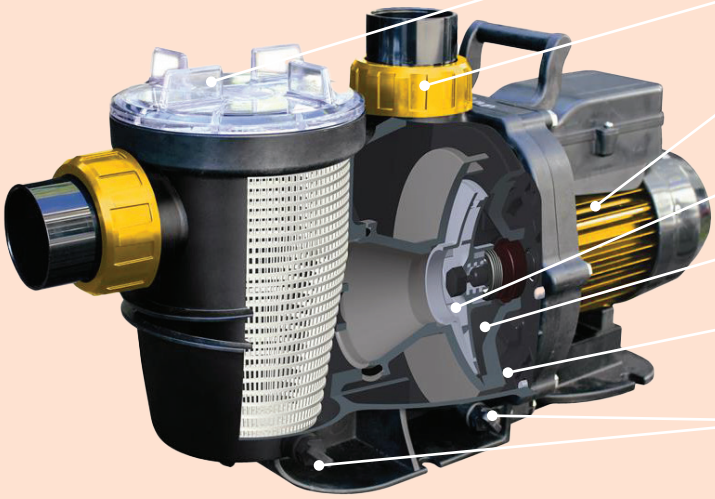

- **Large 2.05L Leaf Basket,** with easy to remove transparent lid
- **50mm Barrel unions supplied** for simple installation
- **High performance motor,** 303 grade stainless steel shaft and thermal overload protection
- **Efficient impeller and diffuser,** designed for improved head and water flow performance
- **Unique Smart Motor Protection,** designed to prevent motor damage
- **High grade 316 stainless steel mechanical seal protection,** for long service life and reduced maintenance
- **Drain plugs,** enables quick draining of the casing for easy removal and maintenance

ELECTRICAL DATA			
Model	DEF290	DEF430	DEF520
Voltage (VAC)	220-240		
Frequency (Hz)	50		
Run current (A)	4.7	6.9	9
Motor input power P1 (kW/hp)	1.06/1.4	1.61/2.2	2.05/2.7
Motor output power P2 (kW/hp)	0.8/1.0	1.1/1.5	1.5/2.0
Nominal speed (rpm)	2810	2850	2880
Enclosure class (IP)	X5		
Insulation class	F		
Sound pressure level (dBa @ 1m)	63	66	69
Max water temperature (°C)	45°C		
Max ambient temperature (°C)	50°C		
Max casing pressure (kPa)	350 kPa		

HYDRAULIC PERFORMANCE

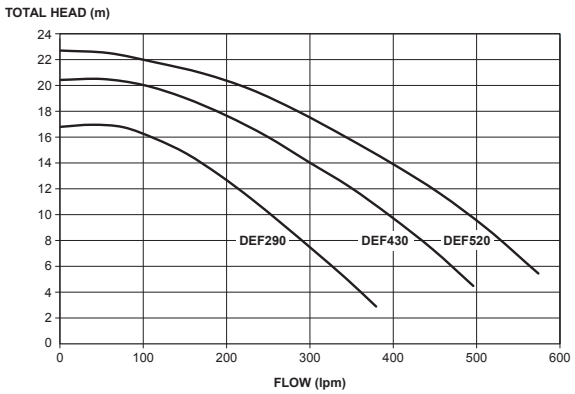

DIMENSIONS (mm)				
Model	DIM A	Mounting Holes Diameter	Inlet/Outlet PVC	Net Weight (kg)
DEF290	626	Ø9mm 132 front / 120 rear	Barrel unions, 40 and 50mm tails	17
DEF430	645			20
DEF520	685			23

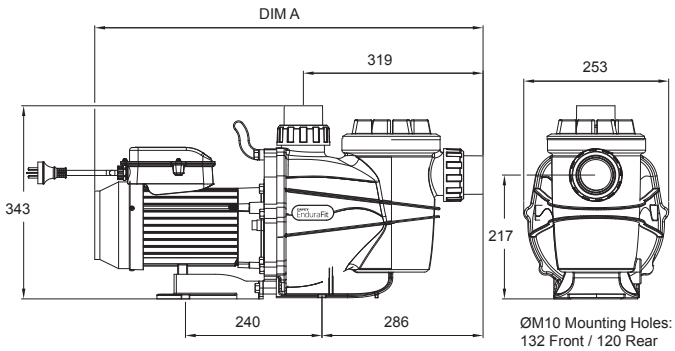

H/O & MFG SCORESBY
Certified System Quality ISO 9001
Certified System Environment ISO 14001

daveywater.com

This literature is not a complete guide to product usage. All images provided in this document are for illustration purposes only. Further information is available from your Davey Dealer, Davey Support Centre and from the relevant product Installation and Operating Instructions. Must be read in conjunction with the relevant product Installation and Operating Instructions and all applicable statutory requirements. Product specifications may change without notice.
® Davey is a registered trademark of Davey Water Products Pty Ltd. © Davey Water Products Pty Ltd 2025.

DAVEY

DWP3314/0725