

DAVEY

EnduraFit ECO

Model Numbers:
DEFE245, DEFE385

WARRANTY
3 YEARS*

APPLICATIONS

Ideal for filtration, spa jets, heating and in-floor cleaning systems. Models to suit plunge pools, swim spas and pools up to 93,000 litres.

EnduraFit ECO ENERGY SAVING VARIABLE SPEED PUMP

Built to Endure, Engineered to Perform.

EnduraFit ECO Pumps are designed to deliver dependable performance with smart engineering and variable speed operation for 5-star energy efficiency.

FEATURES & BENEFITS

- **Variable speeds for different applications** – allows you to switch and program speeds between ECO Flow (lowest speed for best energy efficiency^) for pool filtration, Mid Flow for pool cleaning and High Flow for all other pool applications
- **Programmable intelligence** – allows for fully programmable speed options between Eco, Mid and High Flow speeds, maximising your pool efficiency, use and performance
- **Universal fit:** developed to specifications that retrofit a wide variety of existing installations**.**
- **Safe and Stable:** engineered with Thermal Overload and Smart Motor Protection, designed to prevent water ingress from the wet-end, ensuring complete motor protection.
- **Quieter, Smoother Operation:** the heavy-duty pump body and design reduces water turbulence and operating noise, while the robust support base and added insulation help absorb vibration.
- **Save time and money:** move more water, using less energy. The energy efficient design lowers electricity bills without sacrificing performance.
- **Better water quality:** smooth, consistent flow improves chemical distribution and debris removal.

^ Running your pump at lower speeds uses less energy to turn over the same amount of water over longer time periods.

*See Installation & Operating Instructions at davey.com.au for full details.

Variable Speed Pumps

DAVEY

DAVEY EnduraFitECO

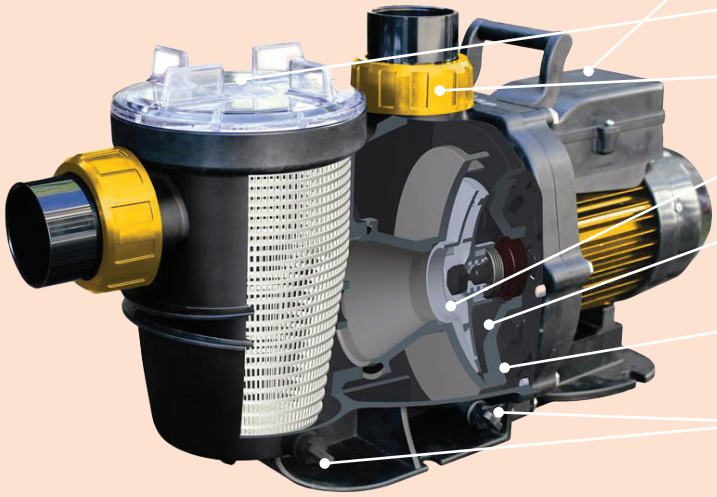

- **3 speed variable control** with fully programmable speed options for maximum performance and efficiency
- **Easy to remove, see through lid** – with large leaf basket
- **50mm ABS quick coupling barrel unions** for easy connection and installation
- **Efficient impeller and diffuser,** designed for improved head and water flow performance
- **Unique Smart Motor Protection design and Auto reset thermal pretection** to prevent motor damage
- **High grade 316 stainless steel mechanical seal protection,** for long service life and reduced maintenance
- **Drain plugs,** enables quick draining of the casing for easy removal and maintenance

ELECTRICAL DATA		
Model	DEFE245	DEFE385
RPM	Eco Flow – 1900rpm	
	Mid Flow – 2400rpm	
	High Flow – 2850rpm	
Enclosure Class (IP)	IPX5	
Insulation Class	F	
Voltage (VAC)	220-240	
Supply Frequency (Hz)	50	
Run current (A)	6.1	9.0
Input Power P1 (kW / hp)	Eco 0.3 / 0.4	Eco 0.45 / 0.6
	Mid 0.55 / 0.74	Mid 0.85 / 1.15
	High 0.91 / 1.24	High 1.42 / 1.93
Output Power P2 (kW / hp)	Eco 0.24 / 0.32	Eco 0.36 / 0.48
	Mid 0.44 / 0.60	Mid 0.68 / 0.92
	High 0.73 / 1.0	High 1.15 / 1.5

OPERATING LIMITS	
Max. water temperature	45°C
Max. ambient temperature	50°C
Max. casing pressure	350kPa

Low Energy Operation:
Your EnduraFit ECO Series pump has 3 speed settings which are also programmable:

1. **Eco Flow – Lowest Speed**
2. **Mid Flow – Medium Speed**
3. **High Flow – Highest Speed**

- Eco Flow mode provides the lowest speed and therefore the greatest energy savings.
- For programmable speed options and settings, please contact Davey, your Davey dealer or Davey pool pump installation professional.

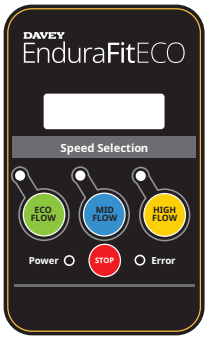

Operation	Recommended Speed Setting
Pool filtration	Eco Flow
Automatic pool cleaner operation	Mid Flow
Backwashing your media filter	High Flow
Manually cleaning your pool	
Water feature operation	
Spa jet operation	
Solar pool heating	

DIMENSIONS (mm)			
Model	Mounting Holes Diameter	Inlet/Outlet PVC	Net Weight (kg)
DEFE245	Ø9mm 132 front / 120 rear	50	14.0
DEFE385			15.5

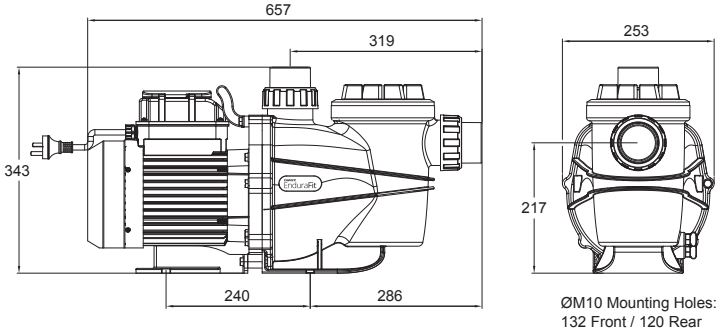

Variable Speed Pumps

DAVEY

HYDRAULIC PERFORMANCE

TOTAL HEAD (m) **DEFE245**

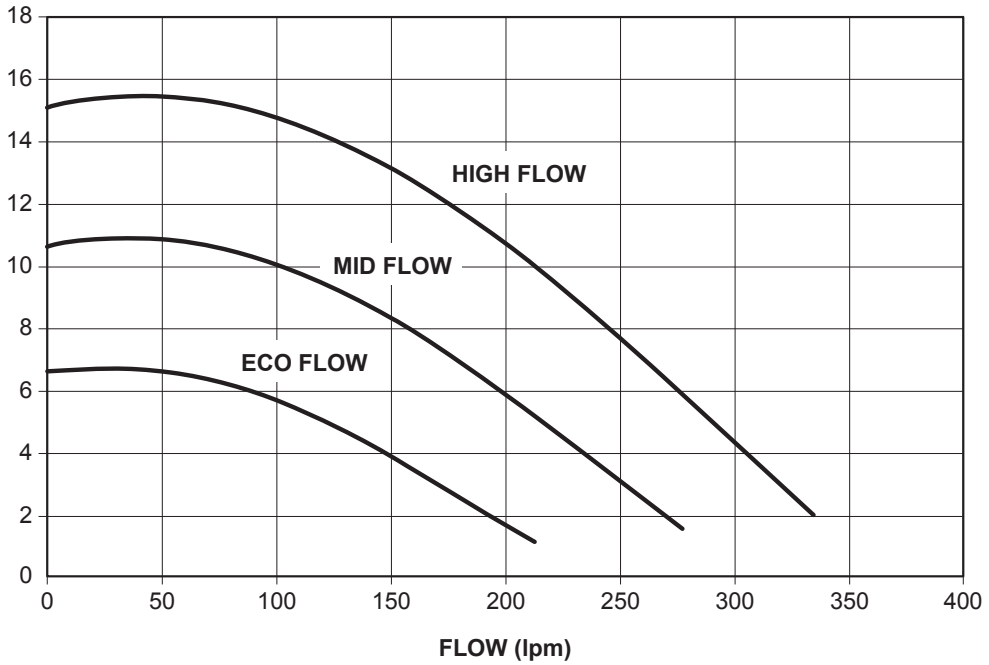

TOTAL HEAD (m) **DEFE385**

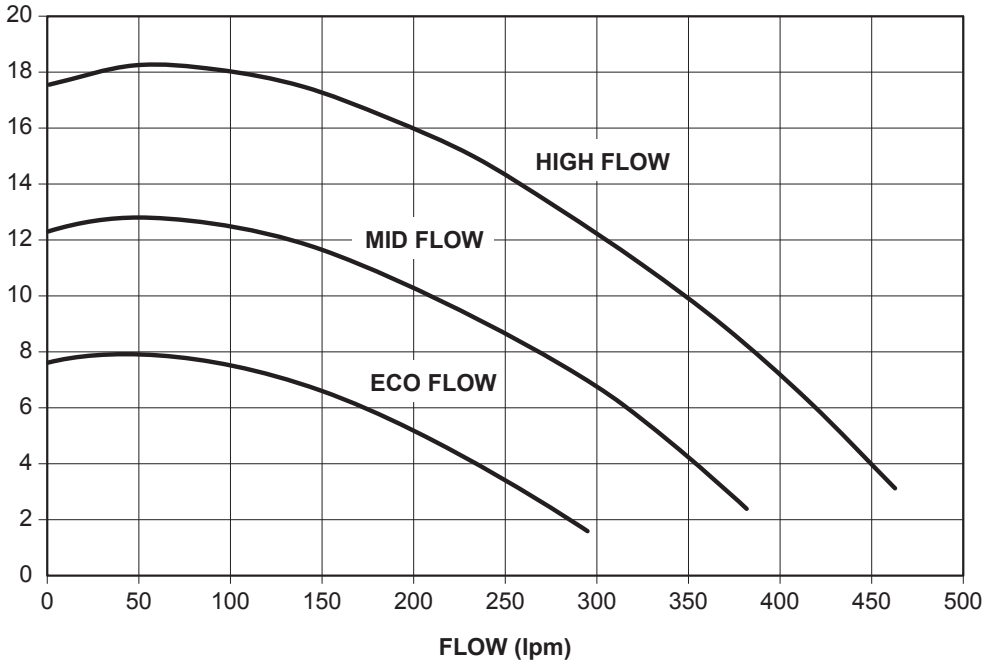

H/O & MFG SCORESBY
Certified System Quality ISO 9001
Certified System Environment ISO 14001

daveywater.com

This literature is not a complete guide to product usage. All images provided in this document are for illustration purposes only. Further information is available from your Davey Dealer, Davey Support Centre and from the relevant product Installation and Operating Instructions. Must be read in conjunction with the relevant product Installation and Operating Instructions and all applicable statutory requirements. Product specifications may change without notice.
® Davey is a registered trademark of Davey Water Products Pty Ltd. © Davey Water Products Pty Ltd 2026.

DAVEY

DWP3315/0825