EMERGENCY GEAR BOX FOR PNEUMATIC ACTUATORS

NOTAUS-GETRIEBE FÜR PNEUMATIKANTRIEB

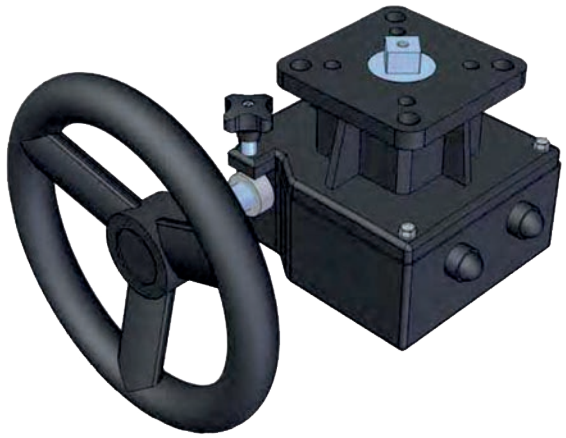

MATERIALS		
DESCRIPTION / BESCHREIBUNG	**Quantity** / Menge	**Materials** / Materialien
Griff	1	**Carbon steel** / C-Stahl
Handwheel shaft / Handrad-Welle	1	C45
Handwheel / Handrad	1	**Grey cast iron** / Grau-Eisenguss
Positioning screw Positionierungsschrauben	1	**Carbon steel** C-Stahl
Worm gear / Schneckengetriebe	1	**Ductile iron** / Kugelgrafit
Support rod / Unterstützungsstange	1	**Grey cast iron** / Grau-Eisenguss
Body / Körper	1	**Grey cast iron** / Grau-Eisenguss

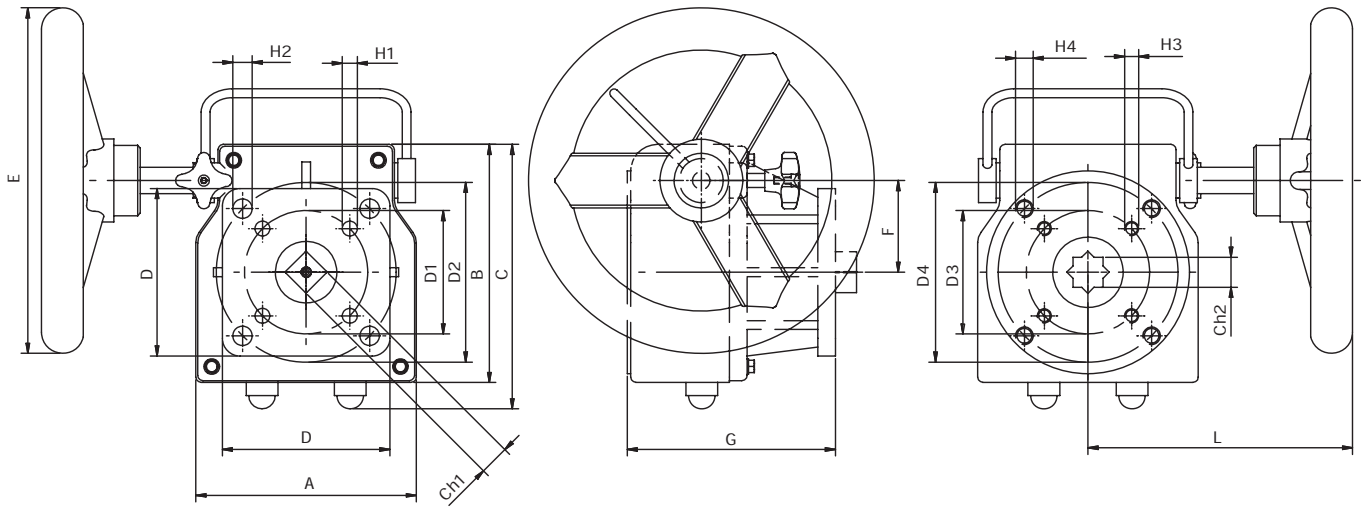

ARTICLE ARTIKEL	A	B	C	E	F	G	L	D1	H1	D2	H2	D3	H3	D4	H4	Ch1	Ch2
GD050	90	110	125	Ø 200	44	100	130	Ø 50	Ø 8,5	Ø 70	Ø 8,5	Ø 50	M 6	Ø 70	M 8	14	17
GD070	125	135	150	Ø 200	52	118	150	Ø 70	Ø 8,5	Ø 102	Ø 11	Ø 70	M 8	Ø 102	M 10	17	17
GD102	140	185	185	Ø 300	65	124	180	Ø 102	Ø 11	Ø 125	Ø 13	Ø 102	M 10	Ø 125	M 12	17	27
GD140	190	230	230	Ø 400	85	162	300	Ø 102	Ø 11	Ø 140	Ø 17	Ø 102	M 10	Ø 140	M 16	27	36
GD165	230	243	268	Ø 600	104,5	230	395	-	-	Ø 185	Ø 21	-	-	Ø 165	M 20	46	36
GD254	260	283	330	Ø 700	130	260	400	Ø 254	Ø 17	Ø 185	Ø 21	-	-	Ø 165	M 20	46	-

ARTICLE ARTIKEL	GEAR RATIO GETRIEBEÜBERSETZUNG	TORQUE MOMENT (NM) DREHMOMENT (NM)
GD050	1 : 40	300
GD070	1 : 38	360
GD102	1 : 36	810
GD140	1 : 50	1310
GD165	1 : 55	2800
GD254	1 : 52	5500

UNI EN ISO 9001: 2008
ISO 14001:2004

EMERGENCY GEAR BOX FOR PNEUMATIC ACTUATORS

NOTAUS-GETRIEBE FÜR PNEUMATIKANTRIEB

ARTEMIS - THESIS

VALVE DN / ABSPERRKLAPPE-DN	ACTUATOR VERSION / ANTRIEBE-VERSION	EMERGENCY GEAR BOX / NOTAUS-GETRIEBE
DN40	Double acting / Doppeltwirkend	GD050
DN50	"	GD050
DN65	"	GD050
DN80	"	GD050
DN100	"	GD050
DN125	"	GD050
DN150	"	GD050
DN200	"	GD070
DN250	"	GD102
DN300	"	GD102
DN40	Single acting / Einfachwirkend	GD050
DN50	"	GD050
DN65	"	GD050
DN80	"	GD050
DN100	"	GD050
DN125	"	GD050
DN150	"	GD070
DN200	"	GD102
DN250	"	GD140
DN300	"	GD140

ATLANTIS – POLARIS

VALVE DN / ABSPERRKLAPPE-DN	ACTUATOR VERSION / ANTRIEBE-VERSION	EMERGENCY GEAR BOX / NOTAUS-GETRIEBE
DN350	Double acting / Doppeltwirkend	GD140
DN400	"	GD140
DN350	Single acting / Einfachwirkend	GD165
DN400	"	GD254

THREADED BALL VALVE
KUGELHÄHNE MIT GEWINDE

VALVE DIMENSION KUGELHAHN-BAUGRÖSSE	ACTUATOR VERSION ANTRIEBE-VERSION	EMERGENCY GEAR BOX NOTAUS-GETRIEBE
1/4"	Double acting / Doppeltwirkend	GD050
3/8"	"	GD050
1/2"	"	GD050
3/4"	"	GD050
1"	"	GD050
1"1/4	"	GD050
1"1/2	"	GD050
2"	"	GD050
2"1/2	"	GD050
3"	"	GD050

VALVE DIMENSION KUGELHAHN-BAUGRÖSSE	ACTUATOR VERSION ANTRIEBE-VERSION	EMERGENCY GEAR BOX NOTAUS-GETRIEBE
1/4"	Single acting / Einfachwirkend	GD050
3/8"	"	GD050
1/2"	"	GD050
3/4"	"	GD050
1"	"	GD050
1"1/4	"	GD050
1"1/2	"	GD050
2"	"	GD050
2"1/2	"	GD050
3"	"	GD050

MOON – SELENE – ANTARES

VALVE DIMENSION KUGELHAHN-BAUGRÖSSE	ACTUATOR VERSION ANTRIEBE-VERSION	EMERGENCY GEAR BOX NOTAUS-GETRIEBE
DN15	Double acting / Doppeltwirkend	GD050
DN20	"	GD050
DN25	"	GD050
DN32	"	GD050
DN40	"	GD050
DN50	"	GD050
DN65	"	GD050
DN80	"	GD050
DN100	"	GD050
DN15	Single acting / Einfachwirkend	GD050
DN20	"	GD050
DN25	"	GD050
DN32	"	GD050
DN40	"	GD050
DN50	"	GD050
DN65	"	GD050
DN80	"	GD070
DN100	"	GD102

SELENE – ANTARES

VALVE DIMENSION KUGELHAHN-BAUGRÖSSE	ACTUATOR VERSION ANTRIEBE-VERSION	EMERGENCY GEAR BOX NOTAUS-GETRIEBE
DN125	Double acting / Doppeltwirkend	GD102
DN150	"	GD102
DN200	"	GD140
DN125	Single acting / Einfachwirkend	GD140
DN150	"	GD140
DN200	"	GD165