TRIPLEX

TRIPLEX

GENERAL PUMP *A member of the Interpump Group*

EZ Series 44 S

2500/3000 PSI, Triplex Plunger Pump

FEATURES

- Solid ceramic plunger design
- Flex coupling and bell housing available for direct drive
- Forged brass manifold with 4:1 hydrostatic rating
- Die-cast, anodized aluminum, oil-bath crankcase
- Premium roller bearing
- Unitized stainless steel inlet and discharge valves
- Available in “L” left-handed versions

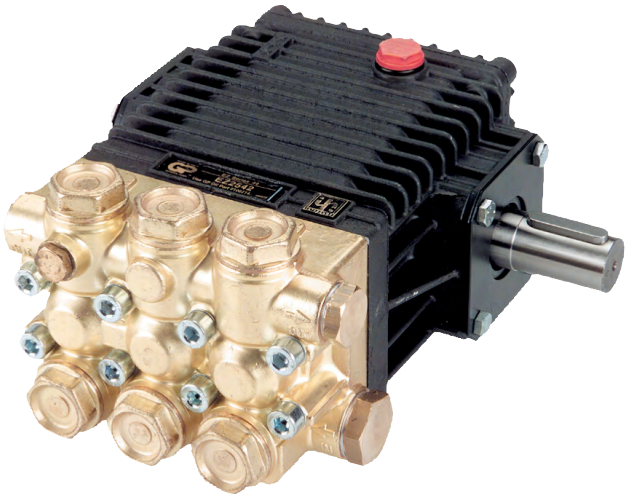

SPECIFICATIONS

Pump Model	EZ2536S	EZ2542S	EZ2545S	EZ2555S	EZ3040S	EZ3042S
Maximum Volume	3.6 GPM	4.2 GPM	4.6 GPM	5.5 GPM	4.0 GPM	4.2 GPM
Maximum Discharge Pressure	2500 PSI				3000 PSI	
Maximum Pump Speed	1750 RPM		3400 RPM			1750 RPM
Maximum Inlet Pressure	125 PSI					
Maximum Inlet Vacuum	3 ft. water (2.6 in. Hg)				9 ft. water (7.9 in. Hg)	
Plunger Bore	.708 in. / 18 mm		.591 in. / 15 mm			.708 in / 18 mm
Plunger Stroke (in. / mm)	.433 / 11	.512 / 13	.433 / 11	.512 / 13	.374 / 9.5	.512 / 13
Crankcase Oil Capacity	14.0 oz.					
Maximum Fluid Temperature	165° F					
Inlet Port Thread	1/2-14 BSPP-F					
Discharge Port Thread	3/8-19 BSPP-F					
Shaft Diameter	.945 in. / 24 mm					
Weight	18 lbs.					
Dimensions	8.6 in. x 8.7 in. x 5.5 in.					

DIMENSIONAL DRAWING

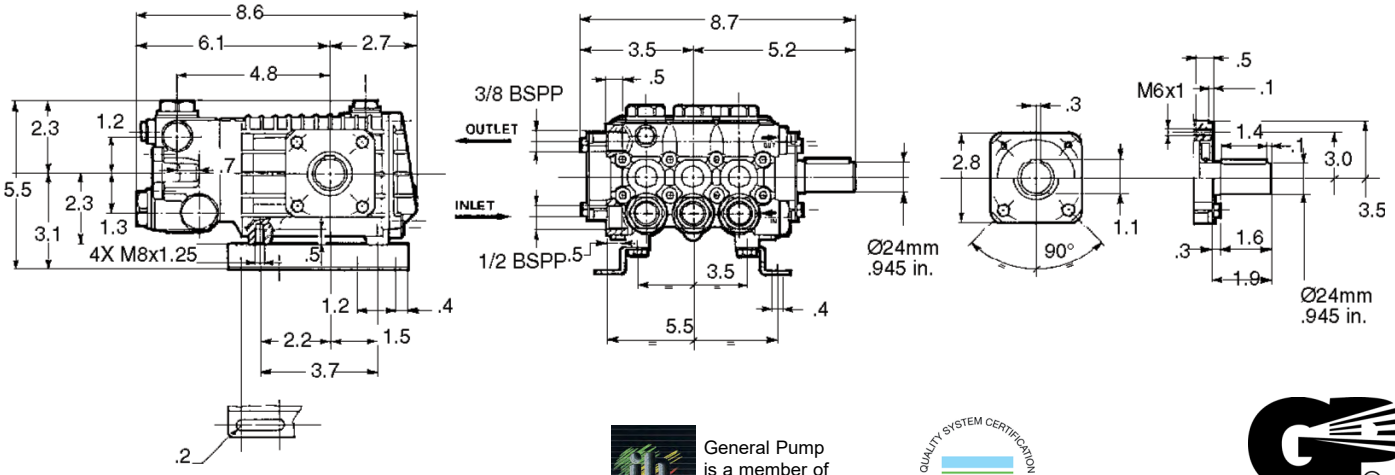

General Pump is a member of the Interpump Group

QUALITY SYSTEM CERTIFICATION DNV·GL ISO 9001

Ref 300302 Rev. K
06-22

GENERAL PUMP

EZ Series 44-2500/3000 PSI

GENERAL PUMP *A member of the Interpump Group*

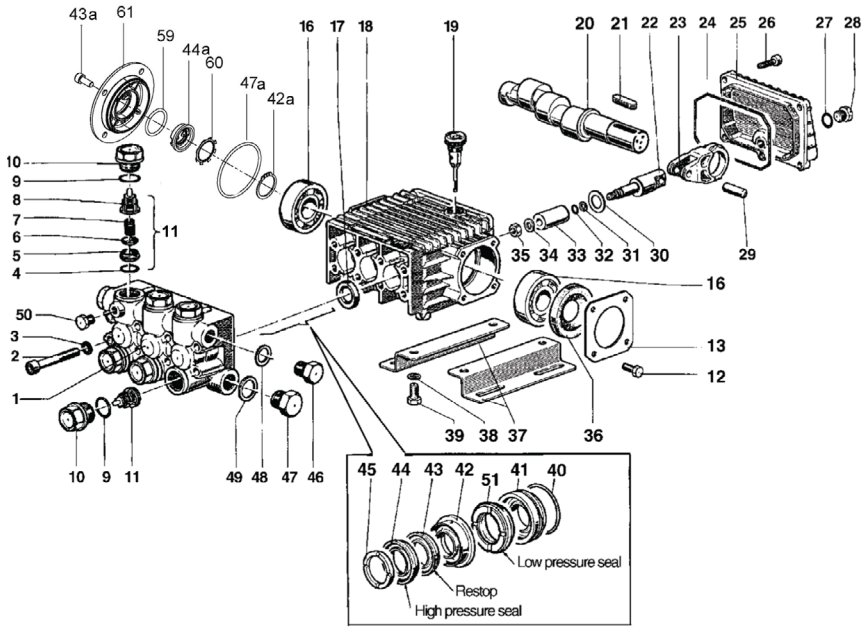

PARTS LIST

ITEM	PART NO.	DESCRIPTION	KIT NO.	QTY.
1.	44120441	Manifold, 18 mm		1
	44120041	Manifold, 15 mm		
2.	99317500	Screw		8
3.	96701400	Washer		8
4.	701115	O-ring	123	6
5.	36200366	Valve Seat	123	6
6.	36711501	Valve	123	6
7.	94737600	Spring	123	6
8.	36202551	Valve Cage	123	6
9.	701002	O-ring	124	6
10.	98222600	Cap Screw	124	6
11.	36711501	Valve Assembly	123	6
16.	91832900	Ball Bearing		1
	91833000	Ball Bearing (EZ3042S)		
17.	90161400	Oil Seal	23	3
18.	44010022	Crankcase		1
19.	98210300	Oil Dip Stick		1
20.	44020035	Crankshaft (EZ3040S)		1
	44020335	Crankshaft (EZ2536S, EZ2545S)		
	44020635	Crankshaft (EZ2542S, EZ2555S, EZ3042S)		

ITEM	PART NO.	DESCRIPTION	KIT NO.	QTY.
21.	91489200	Key		1
22.	44050066	Plunger Guide		3
23.	44030022	Connecting Rod		3
24.	90392000	O-ring		1
25.	44160022	Rear Cover		1
26.	99183700	Screw		5
27.	701013	O-ring		1
28.	98204100	Cap Screw		1
29.	97734000	Pin		3
30.	96735000	Washer		3
31.	660024	Anti-extrusion Ring		3
32.	701501	O-ring		3
33.	44040109	Plunger, 18 mm		3
	52040009	Plunger, 15 mm)		
34.	44211570	Bushing		3
35.	92221600	Nut		3
36.	90164100	Oil Seal		1
40.	90361200	O-ring, 18mm	126,131	3
	90361200	O-ring, 15 mm	125,130	
41.	44080170	Packing Retainer, 18mm)	126,131	3
	44080070	Packing Retainer, 15mm	125,130	

ITEM	PART NO.	DESCRIPTION	KIT NO.	QTY.
42.	44216170	Interm. Ring, 18 mm	128,131	3
	52216670	Interm. Ring, 15 mm	89,130	
42a.	90063500	Stop Ring Ø 25		1
43.	90268300	Packing, 18mm	127,131	3
	90262200	Packing, 15mm	88,130	
43a.	99183700	Screw M6x14		4
44.	90268200	Packing, 18mm	127,131	3
	90262000	Packing, 15mm	88,130	
44a.	53210851	Oil Level Indicator		1
45.	44100151	Head Ring, 18mm	129,131	3
	51100051	Head Ring, 15mm	90,130	
46.	98210000	Cap Screw		1
47.	98217600	Cap Screw		1
47a.	90389800	O-ring Ø 56.82x2.62		1
48.	96738000	Washer		1
49.	96751400	Washer		1
50.	98196600	Cap Screw		1
51.	90268400	Seal, Low Pressure, 18 mm	127,131	3
	90261700	Seal, Low Pressure, 15 mm	88,130	3
59.	90385900	O-ring Ø 25.07x2.62		1
60.	Stop Ring			1
61.	Side Cover			1

* 53150001 Oil Level Indicator Assembled W/O Screws and O-ring

REPAIR KITS

KIT NO.	All K23	(15mm) (18 mm) K88 or K127	(15mm) (18 mm) K89 or K128	(15mm) (18 mm) K90 or K129	All K123	All K124	(15mm) (18 mm) K125 or K126	(15mm) (18 mm) K130 or K131
ITEM NO's INCLUDED IN KIT	17	43, 44, 51	42	45	4, 5, 6, 7, 8 (11)	9, 10	40, 41	40, 41, 42, 43, 44, 45, 51
NUMBER OF ASSEMBLIES IN KIT	3	3/6	3	6	6	6	3	1
NUMBER OF CYLINDERS KIT WILL SERVICE	3	3	3	3	3	3	3	1

TORQUE SPECS*

Pos.	Ft/lb	N-M
2	14.7	20
10	95.9	130
12	7.3	10
26	7.3	10
28	14.7	20
35	11.0	15
39	14.7	20
46	29.4	40
47	29.4	40
50	9.6	13

* Decrease torque by 20% if threads are lubricated

WARNING: High Pressure Systems require a primary pressure regulating device (i.e. regulator, unloader) and a secondary pressure relief device (i.e. pop-off valve, relief valve). Failure to install such relief devices properly could result in personal injury or damage to pump or property. GP does not assume any liability or responsibility for the operation of the user's high pressure system.

WARNING: This product can expose you to chemicals including lead, which is know to the state of California to cause cancer and birth defects or other reproductive harm. For more information, go to www.P65Warnings.ca.gov

GENERAL PUMP 1174 Northland Drive • Mendota Heights, MN 55120
Phone: 651.686.2199 • Fax: 800.535.1745 • e-mail: sales@gpcompanies.com • www.generalpump.com

Ref 300302 Rev. K
06-22

GENERAL PUMP