

WIRING:
RED = +24VDC
BLACK = GND
WHITE = +24VDC (OPEN), 0VDC (CLOSE)
GREEN = +24VDC FEEDBACK (OPEN)
BROWN = +24VDC FEEDBACK (CLOSED)

WIRE LENGTH: 18" ± 1"

PARTS LIST			
ITEM	QTY	PART NUMBER	DESCRIPTION
1	1	EP32B10523	EVX ACT 1.5S WWC 5W 24V OP/CL-VFY
2	1	EVP20001	EV U-PIN
3	1	EVX151X	EVX 1 1/2" NPT 2 WAY BOLTED VALVE ONLY

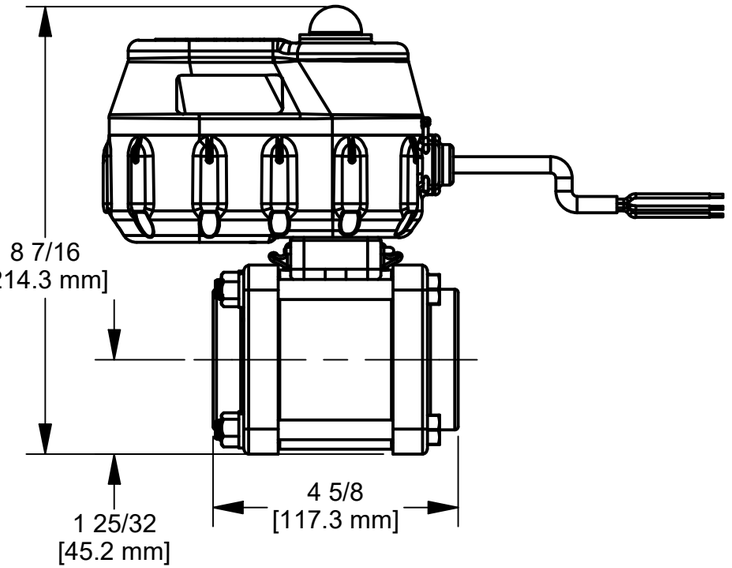

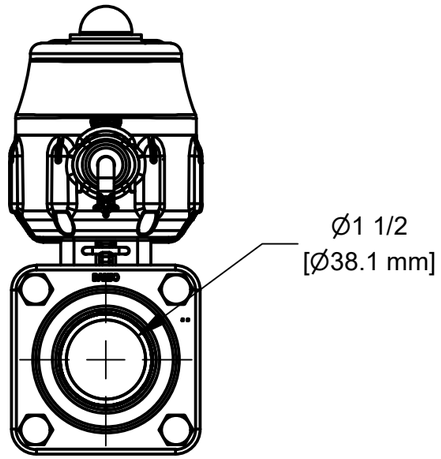

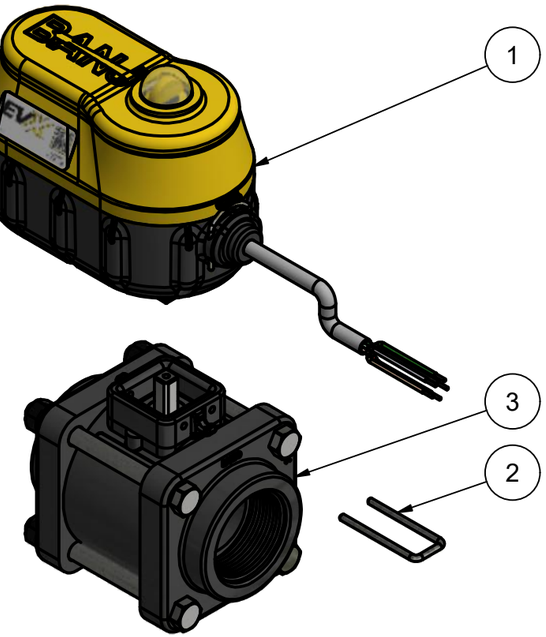

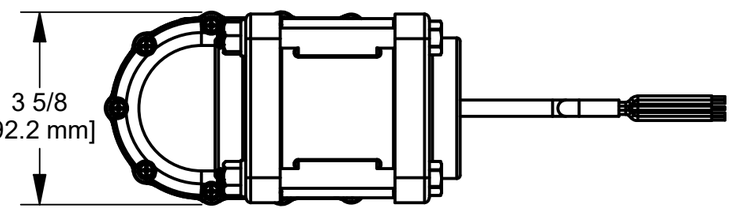

BANJO CORPORATION

THIS DRAWING AND ALL INFORMATION CONTAINED THEREON ARE THE EXCLUSIVE PROPERTY OF BANJO CORPORATION.

UNLESS SPECIFICALLY NOTED, THIS DRAWING AND ITEMS SHOWN ON THIS DRAWING ARE SUBJECT TO CHANGE AT ANY TIME.

BANJO CORPORATION
150 BANJO DRIVE, CRAWFORDSVILLE, IN 47933
WEB SITE: WWW.BANJOCORP.COM
E-MAIL: BANJOSALES@IDEXCORP.COM

DESCRIPTION
EVX 1.5" NPT BOLTED 1.5S 3W 24V OPEN/CLOSE VERIFY

PART NUMBER
EVX15124F3