| PARTS LIST | | | |
|---|---|---|---|
| ITEM | QTY | PART NUMBER | DESCRIPTION |
| 1 | 1 | MEV25151A | 2" FP Top Load Stem Assy w/ Square Drive |
| 2 | 1 | MVE004 | MVE Mounting Breather |
| 3 | 2 | V25264 | O-RING, ID: 3.575", CS: 0.103, FKM |
| 4 | 2 | VE25258A | 2" FP VE Seat TFM |

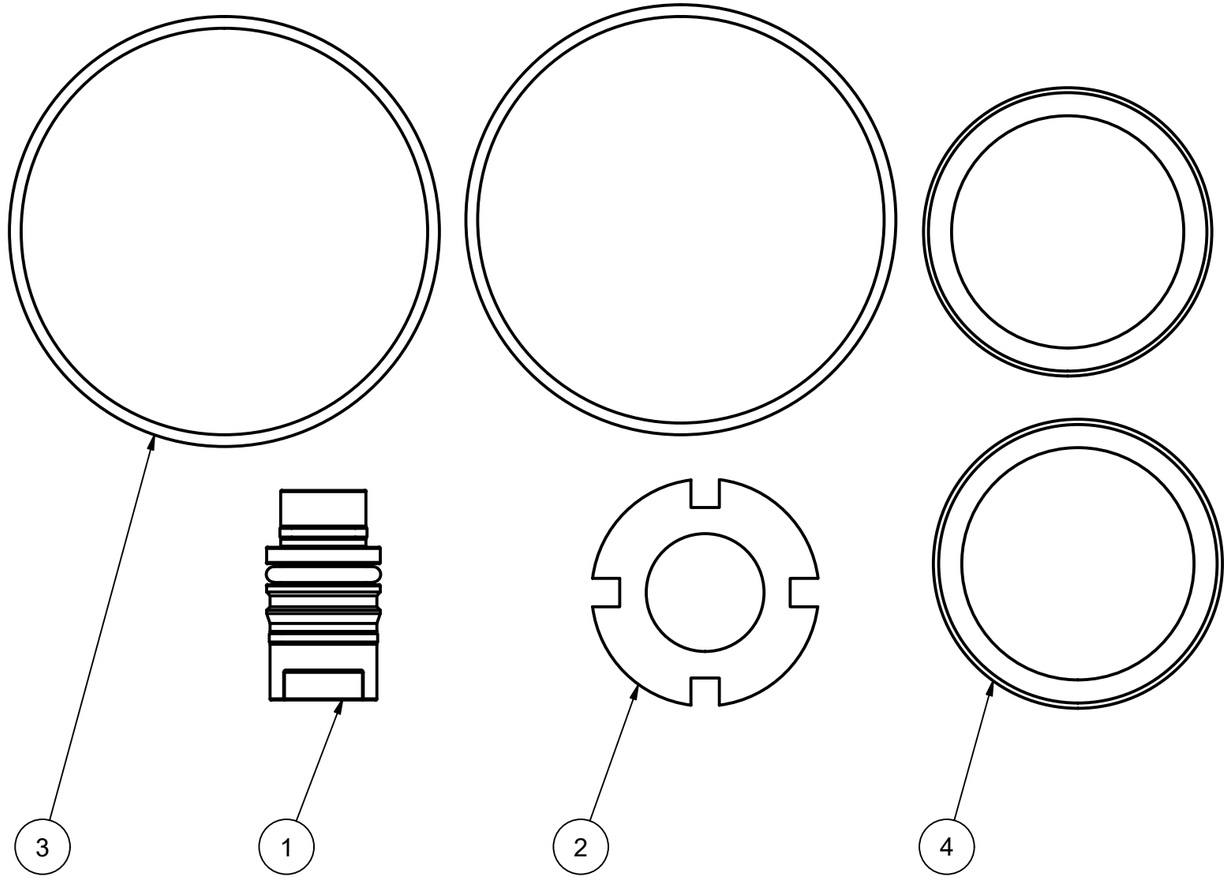




THIS DRAWING AND ALL INFORMATION CONTAINED THEREON ARE THE EXCLUSIVE PROPERTY OF BANJO CORPORATION.

UNLESS SPECIFICALLY NOTED, THIS DRAWING AND ITEMS SHOWN ON THIS DRAWING ARE SUBJECT TO CHANGE AT ANY TIME.

BANJO CORPORATION
150 BANJO DRIVE, CRAWFORDSVILLE, IN 47933
WEB SITE: WWW.BANJOCORP.COM
E-MAIL: BANJOSALES@IDEXCORP.COM

DESCRIPTION
2" FP EV VALVE REPAIR KIT SQ DRV

PART NUMBER
EV25211